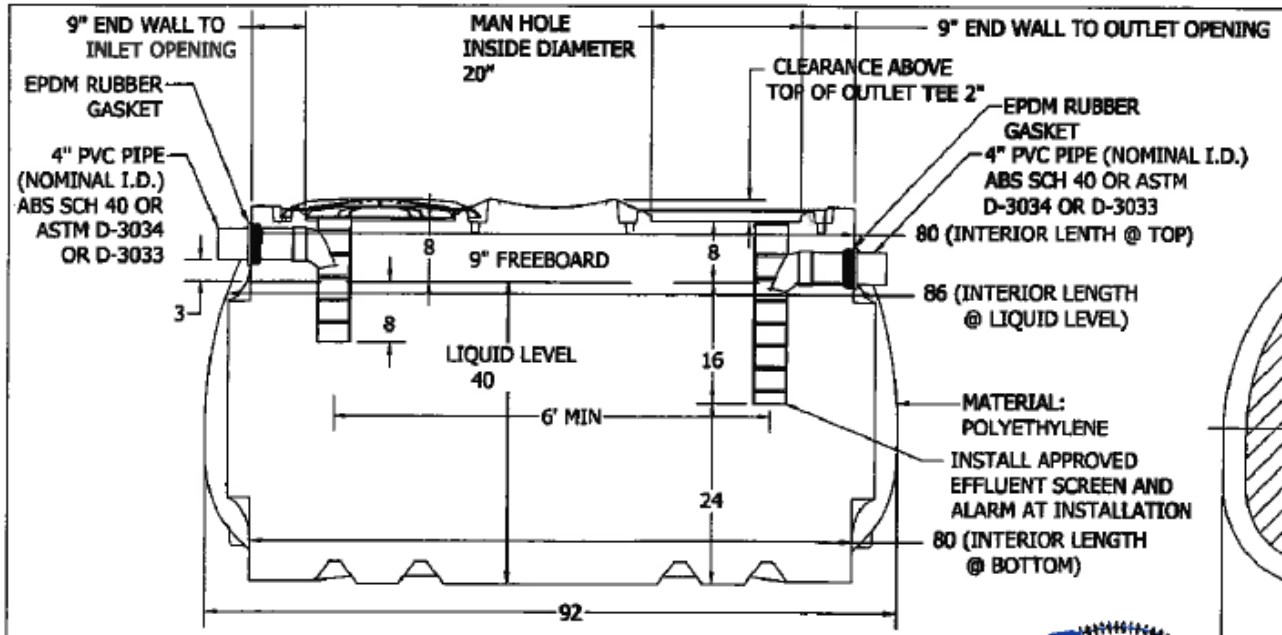

SECTION B-B

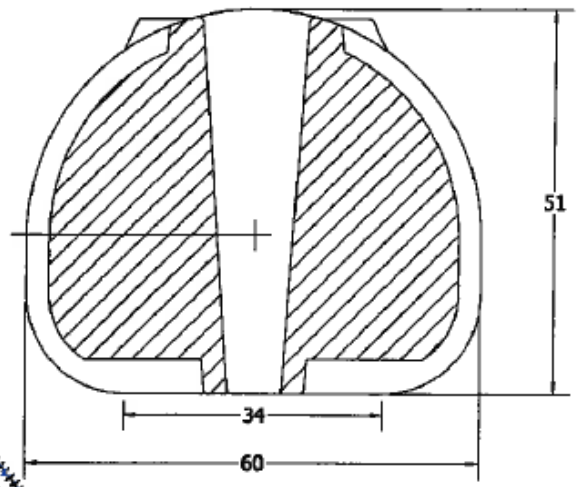

SECTION A-A
SCALE 0.06 : 1

COMMONWEALTH OF VIRGINIA
JOHN REESE LEAVITT
LIC. NO. 0402 031483
4-4-2013
PROFESSIONAL ENGINEER

LEAVITT & ASSOCIATES ENGINEERS, INC.
STRUCTURAL CIVIL SURVEYING

TANK SPECIFICATIONS	
INTERIOR LENGTH @ TOP	80 IN
INTERIOR LENGTH @ LIQUID LEVEL	86 IN
INTERIOR LENGTH @ BOTTOM	80 IN
INTERIOR WIDTH @ TOP	0 IN
INTERIOR WIDTH @ LIQUID LEVEL	50 IN
INTERIOR WIDTH @ BOTTOM	40 IN
HEIGHT (INTERIOR)	50.5 IN
LIQUID LEVEL	40 IN
WORKING CAPACITY	750 GALLONS
FREEBOARD	15%
TANK TOP THICKNESS	.25 IN
TANK SIDE THICKNESS	.25 IN
TANK BOTTOM THICKNESS	.25 IN
TANK END THICKNESS	.25 IN

DRAWN	Todd Bolzer	6/28/2011
CHECKED		
QA		
MFG		
APPROVED		

NORWESCO
NORWESCO, INC., ST. BONIFACIUS, MN

TITLE
750 GALLON LOW PROFILE SEPTIC TANK
VIRIGINIA

SIZE B | REV | SCALE: 1/16 | SHEET 2 OF 2