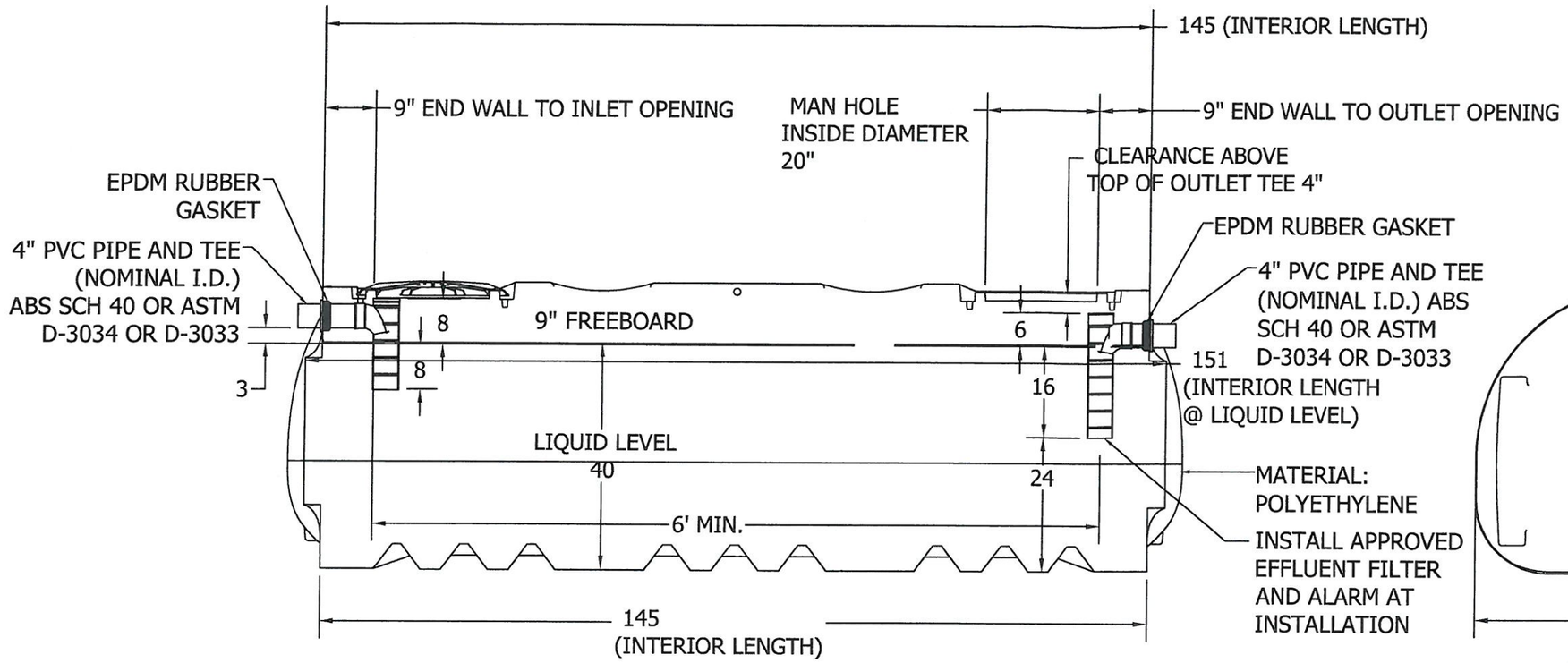

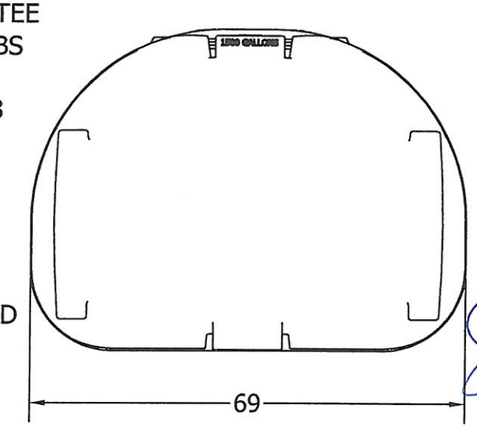

SECTION A-A
SCALE 0.06 : 1

COMMONWEALTH OF VIRGINIA
JOHN REESE LEAVITT
LIC. NO. 0402 031483
7-9-13
PROFESSIONAL ENGINEER

TANK SPECIFICATIONS	
INTERIOR LENGTH @ TOP	145 IN
INTERIOR LENGTH @ LIQUID LEVEL	151 IN
INTERIOR LENGTH @ BOTTOM	145 IN
INTERIOR WIDTH @ TOP	9 IN
INTERIOR WIDTH @ LIQUID LEVEL	59 IN
INTERIOR WIDTH @ BOTTOM	49 IN
HEIGHT (INTERIOR)	50.5 IN
LIQUID LEVEL	40 IN
WORKING CAPACITY	1500 GALLONS
FREEBOARD	15%
TANK TOP THICKNESS	.25 IN
TANK SIDE THICKNESS	.25 IN
TANK BOTTOM THICKNESS	.25 IN
TANK END THICKNESS	.25 IN

LEAVITT & ASSOCIATES
ENGINEERS, INC.
*STRUCTURAL * CIVIL*
SURVEYING
1324 FIRST STREET SOUTH, NAMPA, IDAHO 83651
PHONE (208)463-0333/463-7670 FAX (208)463-9040

DRAWN Todd Bolzer	5/27/2011	NORWESCO, INC., ST. BONIFACIUS, MN
CHECKED		TITLE
QA		1500 GALLON LOW PROFILE SEPTIC TANK VIRGINIA
MFG		
APPROVED		SIZE B / REV
		SCALE: 1/16 / SHEET 2 OF 2

S:\STRUCTURAL - 2012\Norwesco - 12037\009 - Virginia\1500 x 60 x 157 VA 11-11-11_Sheet_2SPETIC