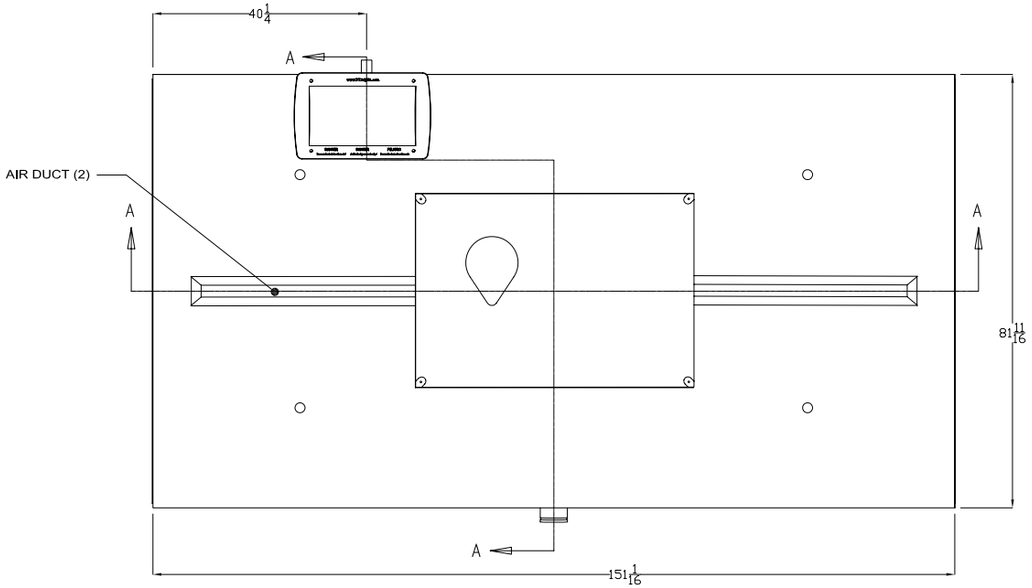

TOP VIEW

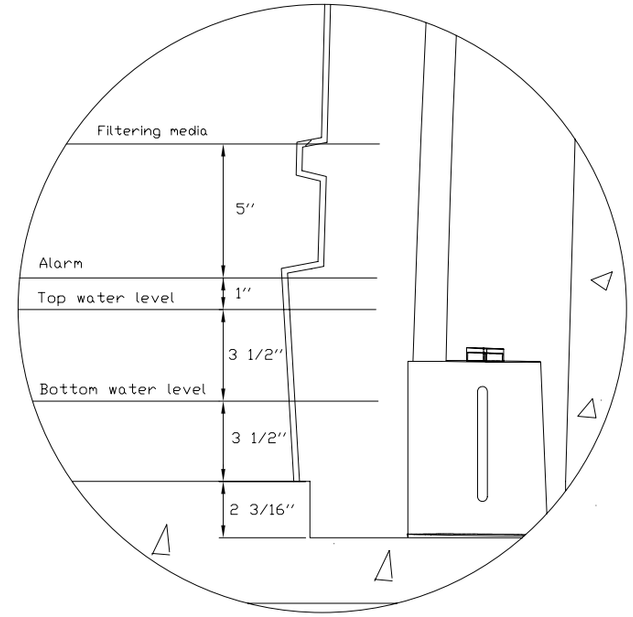

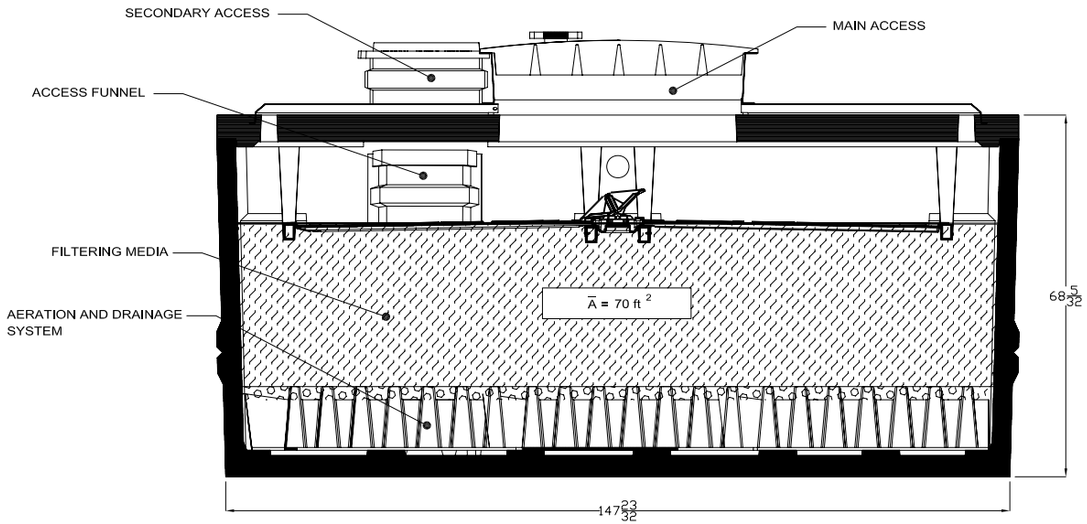

SECTION A-A

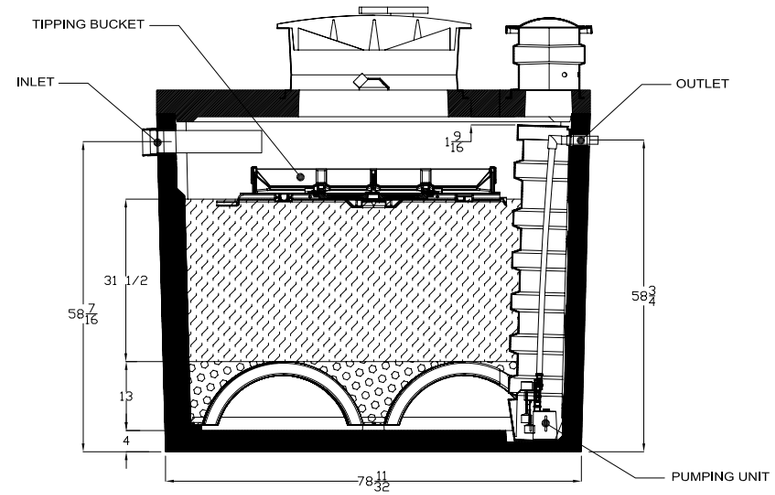

SECTION B-B

REVISION NO:	PAR	DATE

Premier Tech

RIVIERE-DU-LOUP, QUEBEC TEL: (418) 867-8883, FAX: (418) 862-6642

DRAWN	S.BRISSON	03/2006
VERIFIED		
APPROVED		

SCALE : NONE

UNIT : INCHES

TOLERANCES SPECIFIED	
DECIMAL	± 3 mm
FRACT.	± 1/8"
ANGLE	± 1.0

STB-650BR ECOFLO
CONCRETE TANK
Middle height

DRAWING no.: FTE233001A-1

SHEET no. 1/1