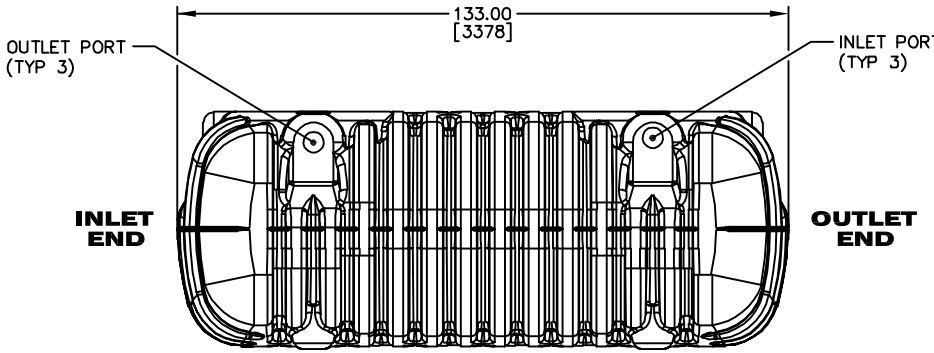

SIDE VIEW

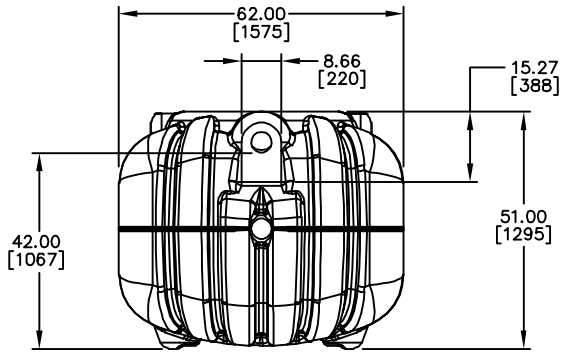

END VIEW

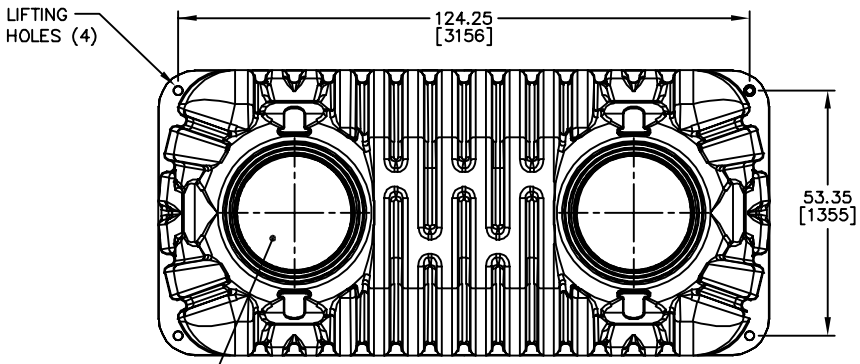

TOP VIEW

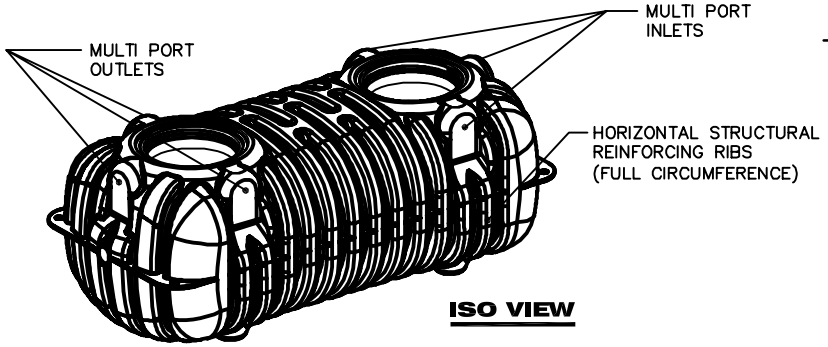

ISO VIEW

NOTES:

1. TANK CERTIFIED FOR IAPMO #4622, CAN/CSA CERT. #1506690, AND ASTM STANDARDS.
2. TANK MATERIAL OF CONSTRUCTION IS HMW–HDPE.
3. PRIMARY DIMENSIONS IN INCHES–MILLIMETERS IN [].

	Date	Name
Design		
Drn.	2/18/05	PJN
Chk.		

Scale: N.T.S.

Rev	Description	Date	Name

FRALO PLASTECH
ONE GENERAL MOTORS DRIVE
SYRACUSE NY 13206

www.fralo.net

THE NEXT GENERATION OF ONSITE WASTEWATER PRODUCTS

SEPTECH™ TANK
1060 GALLON
MODEL ST–1060

DWG NO.: SO–1000–1060

Page No 1 of 1

Rev. 0

Filename F:\FRALO–DWGS\SO_DRAWINGS\SO–1000–1060