PART I. GENERAL FRAMEWORK FOR WATERWORKS REGULATIONS. 9

ARTICLE 1. DEFINITIONS. 9

12 VAC 5-590-10. Definitions. 9

ARTICLE 2. GENERAL INFORMATION. 22

12 VAC 5-590-20. Authority for regulations. 22

12 VAC 5-590-30. Purpose of regulations. 22

12 VAC 5-590-40. Administration of regulations. 22

12 VAC 5-590-50. Application of regulations to waterworks and water supplies in operation or planned prior to the effective date of the regulations. 23

ARTICLE 3. PROCEDURES. 25

12 VAC 5-590-60. Compliance with the Administrative Process Act. 25

12 VAC 5-590-70. Powers and procedures. 25

12 VAC 5-590-80. Procedure. 25

12 VAC 5-590-90. [Reserved] 25

12 VAC 5-590-100. Exception; emergency regulations. 25

12 VAC 5-590-110. Enforcement. 25

12 VAC 5-590-120. Emergency Orders 26

12 VAC 5-590-130. Suspension. 26

12 VAC 5-590-140. Variances. 27

12 VAC 5-590-150. Exemptions. 31

12 VAC 5-590-160. Types of hearings. 35

12 VAC 5-590-170. Request for hearing. 36

12 VAC 5-590-180. Hearing as a matter of right. 36

12 VAC 5-590-190. Permits. 36

12 VAC 5-590-200. Procedure for obtaining a construction permit. 37

12 VAC 5-590-210. Formal requirements for the submission of engineering data. 42

12 VAC 5-590-220. Compliance with Manual of Practice. 42

12 VAC 5-590-230. Issuance of the construction permit. 43

12 VAC 5-590-240. Revisions of approved plans. 43

12 VAC 5-590-250. Statement required upon completion of construction. 43

12 VAC 5-590-260. Issuance of the operation permit. 43

12 VAC 5-590-270. Inspection and correction. 43

12 VAC 5-590-280. Procedure for obtaining a construction permit for well sources. 44

12 VAC 5-590-290. Procedure for issuance of special permits for new or nonconventional methods, processes, and equipment. 44

12 VAC 5-590-300. Procedure for obtaining a general permit for distribution mains. 46

12 VAC 5-590-310. Amendment or reissuance of permits. 47

12 VAC 5-590-320. Revocation or suspension of a permit. 47

12 VAC 5-590-330. Monitoring, records, and reporting. 47

PART II. OPERATION REGULATIONS FOR WATERWORKS. 48

ARTICLE 1. GENERAL. 48

12 VAC 5-590-340. General. 48

12 VAC 5-590-350. Sanitary surveys. 48

12 VAC 5-590-360. Responsibility; owner. 48

12 VAC 5-590-370. Sampling frequency. 49

12 VAC 5-590-380. Bacteriological quality. 101

12 VAC 5-590-390. Chemical and physical quality. 105

12 VAC 5-590-400. Radiological quality. 105

ARTICLE 2. OPERATION OF WATERWORKS. 155

12 VAC 5-590-450. General. 155

12 VAC 5-590-460. Personnel. 155

12 VAC 5-590-470. Waterworks appearance. 157

12 VAC 5-590-480. Analytical laboratory control. 157

12 VAC 5-590-490. Adequate treatment. 158

12 VAC 5-590-500. Disinfection by chlorination. 159

12 VAC 5-590-510. Acceptable operating practices. 160

12 VAC 5-590-520. Waterworks expansion. 161

12 VAC 5-590-530. Reporting. 161

12 VAC 5-590-540. Public notices. 174

12 VAC 5-590-545. Consumer confidence reports. 183

12 VAC 5-590-550. Recordkeeping. 192

12 VAC 5-590-560. Safety. 194

12 VAC 5-590-570. Operational report forms. 194

ARTICLE 3. CROSS CONNECTION CONTROL AND BACKFLOW PREVENTION IN WATERWORKS.

195

12 VAC 5-590-580. General. 195

12 VAC 5-590-590. Cross connections. 195

12 VAC 5-590-600. Responsibilities. 195

12 VAC 5-590-610. Containment policy. 196

12 VAC 5-590-620. Type of protection required. 197

12 VAC 5-590-630. Backflow prevention devices. 198

PART III. MANUAL OF PRACTICE FOR WATERWORKS DESIGN. 200

ARTICLE 1. GENERAL. 200

12 VAC 5-590-640. General. 200

12 VAC 5-590-650. Objectives of a waterworks. 200

12 VAC 5-590-660. Site location. 200

12 VAC 5-590-670. Site size. 200

12 VAC 5-590-680. Treatment process selection. 201

12 VAC 5-590-690. Capacity of waterworks. 201

12 VAC 5-590-700. Metering total water production. 202

12 VAC 5-590-710. Site layout. 203

12 VAC 5-590-720. Building layout. 203

12 VAC 5-590-730. Standby power capability. 204

12 VAC 5-590-740. Maintenance and servicing of equipment. 204

12 VAC 5-590-750. Shop space and storage. 204

12 VAC 5-590-760. Laboratory. 204

12 VAC 5-590-770. Sample taps. 204

12 VAC 5-590-780. Wall castings. 205

12 VAC 5-590-790. Water supply service. 205

12 VAC 5-590-800. Disinfection. 205

12 VAC 5-590-810. Paints, coatings, sealers, or liners. 206

ARTICLE 2. SOURCE DEVELOPMENT. 207

12 VAC 5-590-820. General. 207

12 VAC 5-590-830. Surface water sources; quantity; quality; development structures. 207

12 VAC 5-590-840. Groundwater sources. 209

ARTICLE 3. PROCESSES AND DEVICES. 217

12 VAC 5-590-850. General. 217

12 VAC 5-590-860. Chemical application. 217

12 VAC 5-590-870. Mixing and sedimentation. 224

12 VAC 5-590-880. Filtration. 229

12 VAC 5-590-890. High rate treatment processes. 240

12 VAC 5-590-900. Softening. 242

12 VAC 5-590-910. Aeration. (Also see 12 VAC 5-590-970.) 244

12 VAC 5-590-920. Iron and manganese control. 246

12 VAC 5-590-930. Fluoridation. 247

12 VAC 5-590-940. Fluoride removal. 248

12 VAC 5-590-950. Stabilization. 249

12 VAC 5-590-960. Taste and odor control. 250

12 VAC 5-590-970. Removal of volatile synthetic organic chemicals (VOCs). 252

12 VAC 5-590-980. Microscreening. 252

12 VAC 5-590-990. Waterworks waste. 253

12 VAC 5-590-1000. Disinfection. 253

ARTICLE 4. PUMPING FACILITIES. 258

12 VAC 5-590-1010. General. 258

12 VAC 5-590-1020. Location. 258

12 VAC 5-590-1030. Groundwater facilities. 258

12 VAC 5-590-1040. Pump stations. 260

12 VAC 5-590-1050. Booster pumps. 261

12 VAC 5-590-1060. Automatic and remote controlled stations. 262

12 VAC 5-590-1070. Appurtenances. 262

ARTICLE 5. FINISHED WATER STORAGE STRUCTURES. 264

12 VAC 5-590-1080. General. 264

12 VAC 5-590-1090. Plant storage. 267

12 VAC 5-590-1100. Distribution storage. 268

ARTICLE 6. WATER DISTRIBUTION SYSTEMS. 269

12 VAC 5-590-1110. Materials. 269

12 VAC 5-590-1120. Minimum pipe size. 269

12 VAC 5-590-1130. System design. 269

12 VAC 5-590-1140. Installation of water mains. 269

12 VAC 5-590-1150. Separation of water mains and sewers. 270

12 VAC 5-590-1160. Valve, air relief, meter, and blowoff chambers. 271

12 VAC 5-590-1170. Hydrants. 271

12 VAC 5-590-1180. Surface water crossings. 272

12 VAC 5-590-1190. Water services and plumbing. 272

12 VAC 5-590-1200. Water pressure in systems. 272

12 VAC 5-590-1210. Disinfection of water mains. 272

12 VAC 5-590-1220. Cover. 273

12 VAC 5-590-1230. Metering. 273

PART IV. EXCEPTIONS FOR NONCOMMUNITY WATERWORKS TO SPECIFIC SECTIONS OF THE MANUAL OF PRACTICE (PART III). 274

12 VAC 5-590-1240. General. 274

12 VAC 5-590-1250. Exceptions to Article 1 of Part III. 274

12 VAC 5-590-1260. Exceptions to Article 2 of Part III. 274

12 VAC 5-590-1270. Exceptions to Article 5 of Part III. 274

12 VAC 5-590-1280. Exceptions to Article 6 of Part III. 274

APPENDIX A. [RESERVED] 275

APPENDIX B. BACKGROUND USED IN DEVELOPING THE CHEMICAL, PHYSICAL AND RADIOLOGICAL LIMITS OF THE DRINKING WATER STANDARDS. 276

APPENDIX C. FIELD OFFICE COUNTIES AND CITIES SERVED. 281

APPENDIX D. [RESERVED] 283

APPENDIX E. [RESERVED] 284

APPENDIX F. [REPEALED] 285

APPENDIX G. MONITORING AND REPORTING. 286

APPENDIX H. [REPEALED] 295

APPENDIX I. SUGGESTED OUTLINE OF CONTENTS OF A CROSS CONNECTION CONTROL PROGRAM. 296

APPENDIX J. BACTERIOLOGICAL SAMPLE-SITING REPORT. 298

APPENDIX K. COLIFORM VIOLATION DETERMINATION. 300

APPENDIX L. DETERMINATION OF CT. 301

APPENDIX M. LEAD AND COPPER 323

APPENDIX N. INORGANIC COMPOUNDS AND ORGANIC CHEMICALS 330

APPENDIX O. REGULATED CONTAMINANTS FOR CONSUMER CONFIDENCE REPORTS AND PUBLIC NOTIFICATION. 334

APPENDIX P. 367

DOCUMENTS INCORPORATED BY REFERENCE 370

CHAPTER 590.

WATERWORKS REGULATIONS.

PART I. GENERAL FRAMEWORK FOR WATERWORKS REGULATIONS.

Article 1. Definitions.

12 VAC 5-590-10. Definitions.

As used in this chapter, the following words and terms shall have meanings respectively set forth unless the context clearly requires a different meaning:

"Action level" means the concentration of lead or copper in water specified in 12 VAC 5-590-410 E, which determines, in some cases, the treatment requirements contained in 12 VAC 5-590-420 C, D, E and F that a waterworks is required to complete.

"Air gap separation" means the unobstructed vertical distance through the free atmosphere between the lowest opening from any pipe or faucet supplying pure water to a tank, plumbing fixture, or other device and the rim of the receptacle.

"Annual daily water demand" means the average rate of daily water usage over at least the most recent three-year period.

"Applied water" means water that is ready for filtration.

"Approved" means material, equipment, workmanship, process or method that has been accepted by the division as suitable for the proposed use.

"Auxiliary water system" means any water system on or available to the premises other than the waterworks. These auxiliary waters may include water from a source such as wells, lakes, or streams; or process fluids; or used water. They may be polluted or contaminated or objectionable, or constitute an unapproved water source or system over which the water purveyor does not have control.

"Backflow" means the flow of water or other liquids, mixtures, or substances into the distribution piping of a waterworks from any source or sources other than its intended source.

"Backflow prevention device" means any approved device, method, or type of construction intended to prevent backflow into a waterworks.

"Best available technology (BAT)" means the best technology, treatment techniques, or other means which the commissioner finds, after examination for efficacy under field conditions and not solely under laboratory conditions and in conformance with applicable EPA regulations, are available (taking cost into consideration).

"Board" means the State Board of Health.

"Breakpoint chlorination" means the addition of chlorine to water until the chlorine demand has been satisfied and further additions result in a residual that is directly proportional to the amount added.

"Chlorine" means dry chlorine.

"Chlorine gas" means dry chlorine in the gaseous state.

"Chlorine solution (chlorine water)" means a solution of chlorine in water. Note: the term chlorine solution is sometimes used to describe hypochlorite solutions. This use of the term is incorrect.

"Coagulation" means a process using coagulant chemicals and mixing by which colloidal and suspended materials are destabilized and agglomerated into flocs.

"Coliform bacteria group" means a group of bacteria predominantly inhabiting the intestines of man or animal but also occasionally found elsewhere. It includes all aerobic and facultative anaerobic, gram-negative, non-sporeforming bacilli that ferment lactose with production of gas. Also included are all bacteria that produce a dark, purplish-green colony with metallic sheen by the membrane filter technique used for coliform identification.

"Commissioner" means the State Health Commissioner.

"Community water system" means a waterworks which serves at least 15 service connections used by year-round residents or regularly serves at least 25 year-round residents.

"Compliance cycle" means the nine-year calendar year cycle during which a waterworks must monitor. Each compliance cycle consists of three three-year compliance periods. The first calendar year cycle begins January 1, 1993, and ends December 31, 2001; the second begins January 1, 2002, and ends December 31, 2010; the third begins January 1, 2011, and ends December 31, 2019.

"Compliance period" means a three-year calendar year period within a compliance cycle. Each compliance cycle has three three-year compliance periods. Within the first compliance cycle, the first compliance period runs from January 1, 1993, to December 31, 1995; the second from January 1, 1996, to December 31, 1998; the third from January 1, 1999, to December 31, 2001.

"Comprehensive performance evaluation" (CPE) is a thorough review and analysis of a treatment plant's performance-based capabilities and associated administrative, operational and maintenance practices. It is conducted to identify factors that may be adversely impacting a plant's capability to achieve compliance and emphasizes approaches that can be implemented without significant capital improvements. For purposes of compliance with 12 VAC 5-590-530 C 1 b (2), the comprehensive performance evaluation must consist of at least the following components: assessment of plant performance; evaluation of major unit processes; identification and prioritization of performance limiting factors; assessment of the applicability of comprehensive technical assistance; and preparation of a CPE report.

"Confluent growth" means a continuous bacterial growth covering the entire filtration area of a membrane filter, or a portion thereof, in which bacterial colonies are not discrete.

"Consecutive waterworks" means a waterworks which has no water production or source facility of its own and which obtains all of its water from another permitted waterworks.

"Consumer" means any person who drinks water from a waterworks.

"Consumer's water system" means any water system located on the consumer's premises, supplied by or in any manner connected to a waterworks.

"Contaminant" means any objectionable or hazardous physical, chemical, biological, or radiological substance or matter in water.

"Conventional filtration treatment" means a series of processes including coagulation, flocculation, sedimentation, and filtration resulting in substantial particulate removal.

"Corrosion inhibitor" means a substance capable of reducing the corrosivity of water toward metal plumbing materials, especially lead and copper, by forming a protective film on the interior surface of those materials.

"Cross connection" means any connection or structural arrangement, direct or indirect, to the waterworks whereby backflow can occur.

"CT" or "CT subcalc " means the product of "residual disinfectant concentration" (C) in mg/L determined before or at the first customer, and the corresponding "disinfectant contact time" (T) in minutes, i.e., "C" x "T."

"Daily fluid intake" means the daily intake of water for drinking and culinary use and is defined as two liters.

"Dechlorination" means the partial or complete reduction of residual chlorine in water by any chemical or physical process at a waterworks with a treatment facility.

"Degree of hazard" means the level of health hazard, as derived from an evaluation of the potential risk to health and the adverse effect upon the waterworks.

"Diatomaceous earth filtration" means a process resulting in substantial particulate removal in which (i) a precoat cake of diatomaceous earth filter media is deposited on a support membrane (septum), and (ii) while the water is filtered by passing through the cake on the septum, additional filter media known as body feed is continuously added to the feed water to maintain the permeability of the filter cake.

"Direct filtration" means a series of processes including coagulation and filtration but excluding sedimentation resulting in substantial particulate removal.

"Disinfectant" means any oxidant (including chlorine) that is added to water in any part of the treatment or distribution process for the purpose of killing or deactivating pathogenic organisms.

"Disinfectant contact time ("T" in CT calculations)" means the time in minutes that it takes for water to move from the point of disinfectant application to the point where residual disinfectant concentration ("C") is measured.

"Disinfection" means a process which inactivates pathogenic organisms in water by chemical oxidants or equivalent agents.

"Disinfection profile" means a summary of Giardia lamblia or virus inactivation through the treatment plant.

"Distribution main" means a water main whose primary purpose is to provide treated water to service connections.

"Domestic or other nondistribution system plumbing problem" means a coliform contamination problem in a waterworks with more than one service connection that is limited to the specific service connection from which the coliform positive sample was taken.

"Domestic use or usage" means normal family or household use, including drinking, laundering, bathing, cooking, heating, cleaning and flushing toilets (see Article 2 (§ 32.1-167 et seq.) of Chapter 6 of Title 32.1 of the Code of Virginia).

"Double gate-double check valve assembly" means an approved assembly composed of two single independently acting check valves including tightly closing shutoff valves located at each end of the assembly and petcocks and test gauges for testing the watertightness of each check valve.

"Effective corrosion inhibitor residual," for the purpose of 12 VAC 5-590-420 C 1 only, means a concentration sufficient to form a passivating film on the interior walls of a pipe.

"Enhanced coagulation" means the addition of sufficient coagulant for improved removal of disinfection byproduct precursors by conventional filtration treatment.

"Enhanced softening" means the improved removal of disinfection byproduct precursors by precipitative softening.

"Entry point" means the place where water from the source after application of any treatment is delivered to the distribution system.

"Equivalent residential connection" means a volume of water used equal to a residential connection which is 400 gallons per day unless supportive data indicates otherwise.

"Exception" means an approved deviation from a "shall" criteria contained in Part III (12 VAC 5-590-640 et seq.) of this chapter.

"Exemption" means a conditional waiver of a specific PMCL or treatment technique requirement which is granted to a specific waterworks for a limited period of time.

"Filter profile" means a graphical representation of individual filter performance, based on continuous turbidity measurements or total particle counts versus time for an entire filter run, from startup to backwash inclusively, that includes an assessment of filter performance while another filter is being backwashed.

"Filtration" means a process for removing particulate matter from water by passage

through porous media.

"First draw sample" means a one-liter sample of tap water, collected in accordance with 12 VAC 5-590-370 B 6 a (2), that has been standing in plumbing pipes at least six hours and is collected without flushing the tap.

"Flocculation" means a process to enhance agglomeration or collection of smaller floc particles into larger, more easily settleable particles through gentle stirring by hydraulic or mechanical means.

"Free available chlorine" means that portion of the total residual chlorine remaining in water at the end of a specified contact period which will react chemically and biologically as hypochlorous acid or hypochlorite ion.

"GAC10" means granular activated carbon filter beds with an empty-bed contact time of 10 minutes based on average daily flow and a carbon reactivation frequency of every 180 days.

"Governmental entity" means the Commonwealth, a town, city, county, service authority, sanitary district or any other governmental body established under the Code of Virginia, including departments, divisions, boards or commissions.

"Gross alpha particle activity" means the total radioactivity due to alpha particle emission as inferred from measurements on a dry sample.

"Gross beta particle activity" means the total radioactivity due to beta particle emission as inferred from measurements on a dry sample.

"Groundwater" means all water obtained from sources not classified as surface water (or surface water sources).

"Groundwater under the direct influence of surface water" means any water beneath the surface of the ground with significant occurrence of insects or other macroorganisms, algae, or large-diameter pathogens such as Giardia lamblia, or Cryptosporidium. It also means significant and relatively rapid shifts in water characteristics such as turbidity, temperature, conductivity, or pH that closely correlate to climatological or surface water conditions. The office in accordance with 12 VAC 5-590-430 will determine direct influence of surface water.

"Haloacetic acids (five)" or "(HAA5)" means the sum of the concentrations in milligrams per liter of the haloacetic acid compounds (monochloroacetic acid, dichloroacetic acid, trichloroacetic acid, monobromoacetic acid, and dibromoacetic acid), rounded to two significant figures after addition.

"Halogen" means one of the chemical elements chlorine, bromine, fluorine, astatine or iodine.

"Health hazard" means any condition, device, or practice in a waterworks or its operation that creates, or may create, a danger to the health and well-being of the water consumer.

"Health regulations" means regulations which include all primary maximum contaminant levels, treatment technique requirements, and all operational regulations, the violation of which would jeopardize the public health.

"Hypochlorite" means a solution of water and some form of chlorine, usually sodium hypochlorite.

"Initial compliance period" means for all regulated contaminants, the initial compliance period is the first full three-year compliance period beginning at least 18 months after promulgation with the exception of waterworks with 150 or more service connections for contaminants listed at Table 2.3, VOC 19-21; Table 2.3, SOC 19-33; and antimony, beryllium, cyanide (as free cyanide), nickel, and thallium which shall begin January 1993.

"Interchangeable connection" means an arrangement or device that will allow alternate but not simultaneous use of two sources of water.

"Karstian geology" means an area predominantly underlain by limestone, dolomite, or gypsum and characterized by rapid underground drainage. Such areas often feature sinkholes, caverns, and sinking or disappearing creeks. In Virginia, this generally includes all that area west of the Blue Ridge and, in Southwest Virginia, east of the Cumberland Plateau.

"Large waterworks," for the purposes of 12 VAC 5-590-370 B 6, 12 VAC 5-590-420 C through F, 12 VAC 5-590-530 D, and 12 VAC 5-590-550 D only, means a waterworks that serves more than 50,000 persons.

"Lead free" when used with respect to solders and flux refers to solders and flux containing not more than 0.2% lead; when used with respect to pipes and pipe fittings refers to pipes and pipe fittings containing not more than 8.0% lead; and, when used with respect to plumbing fittings and fixtures intended by the plumbing manufacture to dispense water for human ingestion refers to fittings and fixtures that are in compliance with standards established in accordance with 42 USC § 300g-6(e).

"Lead service line" means a service line made of lead which connects the water main to the building inlet and any lead pigtail, gooseneck or other fitting which is connected to such lead line.

"Legionella" means a genus of bacteria, some species of which have caused a type of pneumonia called Legionnaires Disease.

"Liquid chlorine" means a liquefied, compressed gas as shipped in commerce. Note: The term liquid chlorine is sometimes used to describe a hypochlorite solution often employed for swimming pool sanitation. This use of the term is incorrect.

"Log inactivation (log removal)" means that a 99% reduction is a 2-log inactivation; a 99.9% reduction is a 3-log inactivation; a 99.99% reduction is a 4-log inactivation.

"Man-made beta particle and photon emitters" means all radionuclides emitting beta particles and/or photons listed in the most current edition of "Maximum Permissible

Body Burdens and Maximum Permissible Concentration of Radionuclides in Air or Water for Occupational Exposure," National Bureau of Standards Handbook 69, except the daughter products of thorium-232, uranium-235 and uranium-238.

"Maximum daily water demand" means the rate of water usage during the day of maximum water use.

"Maximum contaminant level (MCL)" means the maximum permissible level of a contaminant in water which is delivered to any user of a waterworks, except in the cases of turbidity and VOCs, where the maximum permissible level is measured at each entry point to the distribution system. Contaminants added to the water under circumstances controlled by the user, except those resulting from corrosion of piping and plumbing caused by water quality, are excluded from this definition. Maximum contaminant levels may be either "primary" (PMCL), meaning based on health considerations or "secondary" (SMCL) meaning based on aesthetic considerations.

"Maximum residual disinfectant level (MRDL)" means a level of a disinfectant added for water treatment that may not be exceeded at the consumer's tap without an unacceptable possibility of adverse health effects. For chlorine and chloramines, a waterworks is in compliance with the MRDL when the running annual average of monthly averages of samples taken in the distribution system, computed quarterly, is less than or equal to the MRDL. For chlorine dioxide, a waterworks is in compliance with the MRDL when daily samples are taken at the entrance to the distribution system and no two consecutive daily samples exceed the MRDL. MRDLs are enforceable in the same manner as maximum contaminant levels. There is convincing evidence that addition of a disinfectant is necessary for control of waterborne microbial contaminants. Notwithstanding the MRDLs listed in Table 2.12, operators may increase residual disinfectant levels of chlorine or chloramines (but not chlorine dioxide) in the distribution system to a level and for a time necessary to protect public health to address specific microbiological contamination problems caused by circumstances such as distribution line breaks, storm runoff events, source water contamination, or cross-connections.

"Maximum residual disinfectant level goal (MRDLG)" means the maximum level of a disinfectant added for water treatment at which no known or anticipated adverse effect on the health of persons would occur, and which allows an adequate margin of safety. MRDLGs are nonenforceable health goals and do not reflect the benefit of the addition of the chemical for control of waterborne microbial contaminants.

"Maximum total trihalomethane potential (MTP)" means the maximum concentration of total trihalomethanes produced in a given water containing a disinfectant residual after seven days at a temperature of 25°C or above.

"Medium-size waterworks," for the purpose of 12 VAC 5-590-370 B 6, 12 VAC 5-590-420 C through F, 12 VAC 5-590-530, and 12 VAC 5-590-550 D only, means a waterworks that serves greater than 3,300 and less than or equal to 50,000 persons.

"Most probable number (MPN)" means that number of organisms per unit volume that, in accordance with statistical theory, would be more likely than any other number

to yield the observed test result or that would yield the observed test result with the greatest frequency, expressed as density of organisms per 100 milliliters. Results are computed from the number of positive findings of coliform-group organisms resulting from multiple-portion decimal-dilution plantings.

"Noncommunity water system" means a waterworks that is not a community waterworks, but operates at least 60 days out of the year.

"Nonpotable water" means water not classified as pure water.

"Nontransient noncommunity water system (NTNC)" means a waterworks that is not a community waterworks and that regularly serves at least 25 of the same persons over six months out of the year.

"Office" means the Commonwealth of Virginia, Department of Health, Office of Drinking Water.

"One hundred year flood level" means the flood elevation which will, over a long period of time, be equaled or exceeded on the average once every 100 years.

"Operator" means any individual employed or appointed by any owner, and who is designated by such owner to be the person in responsible charge, such as a supervisor, a shift operator, or a substitute in charge, and whose duties include testing or evaluation to control waterworks operations. Not included in this definition are superintendents or directors of public works, city engineers, or other municipal or industrial officials whose duties do not include the actual operation or direct supervision of waterworks.

"Optimal corrosion control treatment" means the corrosion control treatment that minimizes the lead and copper concentrations at users' taps while ensuring that the treatment does not cause the waterworks to violate any other section of this chapter.

"Owner" or "water purveyor" means an individual, group of individuals, partnership, firm, association, institution, corporation, governmental entity, or the federal government which supplies or proposes to supply water to any person within this state from or by means of any waterworks (see Article 2 (§ 32.1-167 et seq.) of Chapter 6 of Title 32.1 of the Code of Virginia).

"Picocurie (pCi)" means that quantity of radioactive material producing 2.22 nuclear transformations per minute.

"Point of disinfectant application" means the point where the disinfectant is applied and water downstream of that point is not subject to recontamination by surface water runoff.

"Point-of-entry treatment device (POE)" means a treatment device applied to the water entering a house or building for the purpose of reducing contaminants in the water distributed throughout the house or building.

"Point-of-use treatment device (POU)" means a treatment device applied to a single tap for the purpose of reducing contaminants in the water at that one tap.

"Pollution" means the presence of any foreign substance (chemical, physical, radiological, or biological) in water that tends to degrade its quality so as to constitute an unnecessary risk or impair the usefulness of the water.

"Pollution hazard" means a condition through which an aesthetically objectionable or degrading material may enter the waterworks or a consumer's water system.

"Post-chlorination" means the application of chlorine to water subsequent to treatment.

"Practical quantitation level (PQL)" means the lowest level achievable by good laboratories within specified limits during routine laboratory operating conditions.

"Prechlorination" means the application of chlorine to water prior to filtration.

"Process fluids" means any fluid or solution which may be chemically, biologically, or otherwise contaminated or polluted which would constitute a health, pollutional, or system hazard if introduced into the waterworks. This includes, but is not limited to:

1. Polluted or contaminated water;

2. Process waters;

3. Used waters, originating from the waterworks which may have deteriorated in sanitary quality;

4. Cooling waters;

5. Contaminated natural waters taken from wells, lakes, streams, or irrigation systems;

6. Chemicals in solution or suspension; and

7. Oils, gases, acids, alkalis, and other liquid and gaseous fluid used in industrial or other processes, or for fire fighting purposes.

"Pure water" or "potable water" means water fit for human consumption and domestic use which is sanitary and normally free of minerals, organic substances, and toxic agents in excess of reasonable amounts for domestic usage in the area served and normally adequate in quantity and quality for the minimum health requirements of the persons served (see Article 2 (§ 32.1-167 et seq.) of Chapter 6 of Title 32.1 of the Code of Virginia).

"Raw water main" means a water main which conveys untreated water from a source to a treatment facility.

"Reduced pressure principle backflow prevention device (RPZ device)" means a device containing a minimum of two independently acting check valves together with an automatically operated pressure differential relief valve located between the two check valves. During normal flow and at the cessation of normal flow, the pressure between these two checks shall be less than the supply pressure. In case of leakage of either check valve, the differential relief valve, by discharging to the atmosphere, shall operate to maintain the pressure between the check valves at less than the supply pressure.

The unit must include tightly closing shut-off valves located at each end of the device, and each device shall be fitted with properly located test cocks. These devices must be of the approved type.

"REM" means the unit of dose equivalent from ionizing radiation to the total body or any internal organ or organ system. A "millirem" (MREM) is 1/1000 of a REM.

"Repeat compliance period" means any subsequent compliance period after the initial compliance period.

"Residual disinfectant concentration ("C" in CT Calculations)" means the concentration of disinfectant measured in mg/L in a representative sample of water.

"Responsible charge" means designation by the owner of any individual to have duty and authority to operate or modify the operation of waterworks processes.

"Sanitary facilities" means piping and fixtures, such as sinks, lavatories, showers, and toilets, supplied with potable water and drained by wastewater piping.

"Sanitary survey" means an investigation of any condition that may affect public health.

"Secondary water source" means any approved water source, other than a waterworks' primary source, connected to or available to that waterworks for emergency or other nonregular use.

"Sedimentation" means a process for removal of solids before filtration by gravity or separation.

"Service connection" means the point of delivery of water to a customer's building service line as follows:

1. If a meter is installed, the service connection is the downstream side of the meter;

2. If a meter is not installed, the service connection is the point of connection to the waterworks;

3. When the water purveyor is also the building owner, the service connection is the entry point to the building.

"Service line sample" means a one-liter sample of water, collected in accordance with 12 VAC 5-590-370 B 6 a (2) (c), that has been standing for at least six hours in a service line.

"Sewer" means any pipe or conduit used to convey sewage or industrial waste streams.

"Single family structure," for the purpose of 12 VAC 5-590-370 B 6 (a) only, means a building constructed as a single-family residence that is currently used as either a residence or a place of business.

"Slow sand filtration" means a process involving passage of raw water through a bed of sand at low velocity (generally less than 0.4 m/h) resulting in substantial particulate

removal by physical and biological mechanisms.

"Small waterworks," for the purpose of 12 VAC 5-590-370 B 6, 12 VAC 5-590-420 C through F, 12 VAC 5-590-530 D and 12 VAC 5-590-550 D only, means a waterworks that serves 3,300 persons or fewer.

"Standard sample" means that portion of finished drinking water that is examined for the presence of coliform bacteria.

"Surface water" means all water open to the atmosphere and subject to surface runoff.

"SUVA" means specific ultraviolet absorption at 254 nanometers (nm), an indicator of the humic content of water. It is a calculated parameter obtained by dividing a sample's ultraviolet absorption at a wavelength of 254 nm (UV_{254}) (in m-1) by its concentration of dissolved organic carbon (DOC) (in mg/L).

"Synthetic organic chemicals (SOC)" means one of the family of organic man-made compounds generally utilized for agriculture or industrial purposes.

"System hazard" means a condition posing an actual, or threat of, damage to the physical properties of the waterworks or a consumer's water system.

"Terminal reservoir" means an impoundment providing end storage of water prior to treatment.

"Too numerous to count" means that the total number of bacterial colonies exceeds 200 on a 47-mm diameter membrane filter used for coliform detection.

"Total effective storage volume" means the volume available to store water in distribution reservoirs measured as the difference between the reservoir's overflow elevation and the minimum storage elevation. The minimum storage elevation is that elevation of water in the reservoir that can provide a minimum pressure of 20 psi at a flow as determined in 12 VAC 5-590-690 C to the highest elevation served within that reservoir's service area under systemwide maximum daily water demand.

"Total organic carbon" (TOC) means total organic carbon in mg/L measured using heat, oxygen, ultraviolet irradiation, chemical oxidants, or combinations of these oxidants that convert organic carbon to carbon dioxide, rounded to two significant figures.

"Total trihalomethanes (TTHM)" means the sum of the concentrations of the trihalomethanes expressed in milligrams per liter (mg/L) and rounded to two significant figures. For the purpose of these regulations, the TTHM's shall mean trichloromethane (chloroform), dibromochloromethane, bromodichloromethane, and tribromomethane (bromoform).

"Transmission main" means a water main whose primary purpose is to move significant quantities of treated water among service areas.

"Treatment technique requirement" means a requirement which specifies for a

contaminant a specific treatment technique(s) demonstrated to the satisfaction of the division to lead to a reduction in the level of such contaminant sufficient to comply with these regulations.

"Trihalomethane (THM)" means one of the family of organic compounds, named as derivatives of methane, wherein three of the four hydrogen atoms in methane are each substituted by a halogen atom in the molecular structure.

"Uncovered finished water storage facility" is a tank, reservoir, or other facility used to store water that will undergo no further treatment (except residual disinfection) and is open to the atmosphere.

"Unregulated contaminant (UC)" means a contaminant for which a monitoring requirement has been established, but for which no MCL or treatment technique requirement has been established.

"Used water" means any water supplied by a water purveyor from the waterworks to a consumer's water system after it has passed through the service connection.

"Virus" means a virus of fecal origin which is infectious to humans by waterborne transmission.

"Variance" means a conditional waiver of a specific regulation which is granted to a specific waterworks. A PMCL Variance is a variance to a Primary Maximum Contaminant Level, or a treatment technique requirement. An Operational Variance is a variance to an operational regulation or a Secondary Maximum Contaminant Level. Variances for monitoring, reporting and public notification requirements will not be granted.

"Volatile synthetic organic chemical (VOC)" means one of the family of manmade organic compounds generally characterized by low molecular weight and rapid vaporization at relatively low temperatures or pressures.

"Waterborne disease outbreak" means the significant occurrence of acute infectious illness, epidemiologically associated with the ingestion of water from a waterworks which is deficient in treatment, as determined by the commissioner or the State Epidemiologist.

"Water purveyor" (same as owner).

"Water supply" means water that shall have been taken into a waterworks from all wells, streams, springs, lakes, and other bodies of surface waters (natural or impounded), and the tributaries thereto, and all impounded groundwater, but the term "water supply" shall not include any waters above the point of intake of such waterworks (see Article 2 (§ 32.1-167 et seq.) of Chapter 6 of Title 32.1 of the Code of Virginia).

"Water supply main" or "main" means any water supply pipeline that is part of a waterworks distribution system.

"Water Well Completion Report" means a report form published by the State Water Control Board entitled "Water Well Completion Report" which requests specific

information pertaining to the ownership, driller, location, geological formations penetrated, water quantity and quality encountered as well as construction of water wells. The form is to be completed by the well driller.

"Waterworks" means a system that serves piped water for drinking or domestic use to (i) the public, (ii) at least 15 connections, or (iii) an average of 25 individuals for at least 60 days out of the year. The term "waterworks" shall include all structures, equipment and appurtenances used in the storage, collection, purification, treatment and distribution of pure water except the piping and fixtures inside the building where such water is delivered (see Article 2 (§ 32.1-167 et seq.) of Chapter 6 of Title 32.1 of the Code of Virginia).

"Waterworks with a single service connection" means a waterworks which supplies drinking water to consumers via a single service line.

Article 2. General Information.

12 VAC 5-590-20. Authority for regulations.

Article 2 (§ 32.1-5 et seq.) of Chapter 1 of Title 32.1 of the Code of Virginia provides that the State Board of Health has the duty to protect the public health and to ensure that all water supplies destined for public consumption be pure water. In order to discharge that duty, the board is empowered to supervise and regulate all waterworks and water supplies within the state (see Article 2 of Chapter 1 of Title 32.1 of the Code of Virginia).

12 VAC 5-590-30. Purpose of regulations.

These regulations have been promulgated by the board to:

1. Ensure that all water supplies destined for public consumption be pure water;

2. Guide the commissioner in his determination of whether a permit for a public water supply or waterworks should be issued; and

3. Assist the owner or his authorized engineer in the preparation of an application, plans, specifications, reports and other data.

12 VAC 5-590-40. Administration of regulations.

These regulations are administered by the following parties:

1. State Board of Health, which has responsibility for promulgating, amending, and repealing regulations which ensure a supply of pure water.

2. State Health Commissioner, who is the executive officer of the State Board of Health with the authority of the board when it is not in session and subject to such rules and regulations as may be prescribed by the board.

3. Division of Water Supply Engineering, which is designated as the primary reviewing agent of the board for the purpose of administering this chapter. It examines and passes upon the technical aspects of all applications and plans for waterworks projects prior to the drafting of a permit for final approval by the State Health Commissioner. It also has primary responsibility for monitoring waterworks operations to ensure that water supplied to the public is pure water.

4. Central and field offices, which are maintained by the division, the central office is located in Richmond, Virginia. The Office of Water Programs maintains six field offices which are responsible for activities of the division within their service areas. Applications for waterworks permits should be submitted to the appropriate field office. The addresses of the field offices and a description of the areas that they serve are listed in Appendix C.

5. Waterworks Advisory Committee, which shall be appointed by the commissioner, shall consist of thirteen appointed members and three ex officio members specified below. The commissioner shall appoint to the Waterworks

Advisory Committee one individual each from the following: a member of the Virginia Section American Water Works Association; a member of the Virginia Society of Professional Engineers; a member of the Virginia Water Well Association, Inc.; a member of the Consulting Engineers Council; a water treatment plant operator having a valid license of the highest classification in waterworks issued by the State Board for Waterworks and Wastewater Works Operators; a faculty member of a state university or college whose principal field of teaching is Environmental Engineering; a community waterworks owner; a nontransient noncommunity (NTNC) representative; a representative from Virginia Rural Water Association; a representative from Virginia Water Projects, Inc.; a representative from the Virginia Municipal League; a representative from the Virginia Association of Counties; and a citizen representative. Ex officio members shall consist of the Director, Office of Water Programs, who shall act as chairman; Director, Division of Water Supply Engineering; and Director, Division of Consolidated Laboratory Services or their designees.

Appointed members shall serve at the discretion of the commissioner with staggered terms being of three years in duration. The Waterworks Advisory Committee shall make recommendations to the commissioner regarding waterworks and water supply policies, procedures and programs of the division.

12 VAC 5-590-50. Application of regulations to waterworks and water supplies in operation or planned prior to the effective date of the regulations.

Waterworks and water supplies which were in operation prior to the effective date of the regulations may continue operation if they comply with the operational regulations set forth in Part II. Operation permits, which will be in addition to all permits previously received, will be issued to such waterworks as soon as practicable after the effective date of these regulations.

A. Waterworks and water supplies unable to comply with Part II of this chapter may be issued the appropriate variances and/or exemptions in conjunction with the operation permit to allow continued operation during the period of adjustment. Any variances and/or exemptions will be issued in accordance with the procedures contained in Article 3 of Part I of this chapter.

B. Compliance with design criteria set forth in Parts III and IV is necessary for waterworks modification and construction commenced after the effective date of these revised regulations. Waterworks construction or modification is deemed to be commenced for purposes of this section upon receipt of final plans and specifications by the field office.

C. Compliance with the requirements set forth in Parts III and IV for materials, construction methods, disinfection, etc., is necessary for all repairs to pipes, tanks, pumps, and appurtenances which are part of a waterworks.

D. Volatile Synthetic Organic Chemicals (VOCs) and Unregulated Contaminants (UCs) Regulations are effective immediately for those community and NTNC

waterworks which serve more than 10,000 persons. The VOC and UC regulations are effective immediately for community and NTNC waterworks serving 3,300 to 10,000 persons. The VOC and UC regulations become effective on January 1, 1991, for community and NTNC waterworks serving less than 3,300 persons. (See Table 2.7.)

E. The Lead and Copper Regulations establish a treatment technique that includes requirements for corrosion control treatment, water supply (source water) treatment, lead service line replacement, and public education. These requirements are triggered, in some cases, by lead and copper action levels measured in samples collected at consumers' taps. Unless otherwise indicated, each of the provisions of 12 VAC 5-590-370 B 6, 12 VAC 5-590-420 C through F, 12 VAC 5-590-530 D and 12 VAC 5-590-550 D applies to community waterworks and nontransient noncommunity waterworks. The requirements set forth in 12 VAC 5-590-370 B 6, 12 VAC 5-590-530 D and 12 VAC 5-590-550 D shall take effect on July 7, 1991. The requirements in 12 VAC 5-590-420 C through F shall take effect on December 7, 1992.

Article 3. Procedures.

12 VAC 5-590-60. Compliance with the Administrative Process Act.

The provisions of the Administrative Process Act (Chapter **(2.2-4000 et seq.))** and Title 32.1 of the Code of Virginia govern this chapter. All procedures outlined below are in addition to, or in compliance with, the requirements of that Act.

12 VAC 5-590-70. Powers and procedures.

The board reserves the right to authorize any procedure for the enforcement of this chapter that is consistent with the provisions set forth herein and the provisions of Title 32.1 of the Code of Virginia.

12 VAC 5-590-80. Procedure.

Regulations for the operations, construction, or modification of a waterworks or water supply are established, amended, or repealed only in accordance with the Administrative Process Act.

12 VAC 5-590-90. [Reserved]

12 VAC 5-590-100. Exception; emergency regulations.

If the establishment of a regulation is necessary for the preservation of public health, safety, or welfare, the board or commissioner may immediately promulgate and adopt the necessary regulation by complying with the procedures set forth in § 32.1-13 of the Code of Virginia.

12 VAC 5-590-110. Enforcement.

All waterworks must be operated in compliance with the requirements as set forth in this chapter as follows:

1. Whenever the commissioner, his appointed representative, or the division has reason to believe that a violation of Title 32.1 or of any of this chapter has or is occurring, the division shall so notify the alleged violator. Such notice shall be in writing, shall cite the statute, regulation or regulations that are allegedly being violated, and shall state the facts which form the basis for believing that the violation has occurred or is occurring. A notice of violation may be accompanied by a request that certain corrective action be taken.

2. Pursuant to § 32.1-26 of the Code of Virginia, the commissioner may issue orders to require any owner to comply with the provisions of Title 32.1 of the Code of Virginia or this chapter. The order shall be signed by the commissioner and may require:

a. The immediate cessation or correction of the violation;

b. The acquisition or use of additional equipment, supplies or personnel to ensure that the violation does not recur;

c. The submission of a plan to prevent future violations;

d. The submission of an application for a variance or exemption;

e. Any other corrective action deemed necessary for proper compliance with the chapter; or

f. Division review and approval, if appropriate, of the required submissions.

3. The commissioner may act as the agent of the board to enforce all effective orders and this chapter. Should any owner fail to comply with any effective order or this chapter, the commissioner may:

a. Institute a proceeding to revoke the owner's permit in accordance with 12 VAC 5-590-320;

b. Apply to an appropriate court for an injunction or other legal process to prevent or stop any practice in violation of the order;

c. Request attorney for the Commonwealth to bring a criminal action;

d. Request the Attorney General to bring an action for civil penalty, injunction, or other appropriate remedy; or

e. Do any combination of the above.

4. Nothing in this section shall prevent the commissioner or the division from taking action prior to issuing an order from making efforts to obtain voluntary compliance through conference, warning, or other appropriate means.

5. Hearing as a matter of right (see 12 VAC 5-590-180).

12 VAC 5-590-120. Emergency Orders

The commissioner may, pursuant to § 32.1-175 of the Code of Virginia, issue emergency orders in any case where there is an imminent danger to the public health resulting from the operation of any waterworks or the source of a water supply. An emergency order may be communicated by the best practical notice under all the circumstances and is effective immediately upon receipt. The order may state any requirements necessary to remove the danger to the public health, including the immediate cessation of the operation of the waterworks or the use of any water supply. Violation of an emergency order is punishable as a criminal misdemeanor. Emergency orders shall be effective for a period determined by the commissioner. Emergency orders may be appealed in accordance with the provisions of the Administrative Process Act.

12 VAC 5-590-130. Suspension.

If, in the case of a manmade or natural disaster, the commissioner finds that certain regulations cannot be complied with and that the public health is better served by access to semiregulated or nonregulated water supplies than by the closing of those affected supplies, he may suspend the application of the chapter for specific affected localities and institute a provisional regulatory scheme until the disaster is abated.

12 VAC 5-590-140. Variances.

A. The commissioner may grant a variance to a primary maximum contaminant level (PMCL), a treatment technique requirement, an operational regulation, or a secondary maximum contaminant level (SMCL) by following the appropriate procedures set forth in this section.

1. Requirements for a variance. A PMCL variance may be granted to a waterworks from any requirement respecting a PMCL upon a finding that:

a. Alternative sources of water are not reasonably available to the waterworks;

b. The characteristics of the raw water sources which are reasonably available to the waterworks prevent the waterworks from meeting the PMCL requirements and on condition that the waterworks installs the best available technology, treatment techniques, or other means, which the commissioner finds are generally available (taking costs into consideration); and

c. The granting of a variance will not result in an unreasonable risk to the health of persons served by the waterworks.

2. The commissioner may grant a treatment technique variance from any requirement of a specified treatment technique upon a finding that the waterworks applying for the variance has demonstrated that such treatment technique is not necessary to protect the health of persons because of the nature of the raw water source of such waterworks.

3. The commissioner may grant a variance from an operational regulation or a SMCL if a thorough investigation reveals that the hardship imposed outweighs the benefits that may be received by the public and that the granting of such variance does not subject the public to unreasonable health risks. An operational variance may not be issued from monitoring, reporting, or public notification requirements.

B. Application for a variance. Any owner may apply in writing for a variance. The application should be sent to the appropriate field office for evaluation. All applications for a variance shall include the following:

1. A citation of the regulation from which a variance is requested;

2. The nature and duration of the variance requested;

3. Relevant analytical results of water quality sampling of the waterworks, including results of relevant tests conducted pursuant to the requirements of this chapter;

4. A statement of the hardship to the owner and the anticipated impacts to the public health and welfare if a variance were granted;

5. Suggested conditions that might be imposed on the granting of a variance that

would limit its detrimental impact on public health and welfare;

6. Other information, if any, believed by the applicant to be pertinent to the application; and

7. Such other information as may be required by the commissioner to make the determination.

8. For any application made for a PMCL variance, the applicant shall also include;

a. Explanation in full and evidence of the best available treatment technology and techniques;

b. Economic and legal factors relevant to ability to comply;

c. Analytical results of raw water quality relevant to the variance request;

d. A proposed compliance schedule including the date each step toward compliance will be achieved. Such schedule shall include as a minimum the following dates:

(1) Date by which arrangement for alternative raw water source or improvement of existing raw water source will be completed;

(2) Date of initiation of the connection of the alternative raw water source or improvement of existing raw water source; and

(3) Date by which final compliance is to be achieved.

e. A plan for the provision of safe drinking water in the case of an excessive rise in the contaminant level for which the variance is requested; and

f. A plan for interim control measures during the effective period of the variance.

9. For any application made for a treatment technique variance, the applicant must also include a statement that monitoring and other reasonable requirements prescribed by the commissioner as a condition to the variance will be performed.

C. Consideration of a variance application.

1. The commissioner shall act on any variance application submitted pursuant to subsection B of this section within 90 days of receipt of the application.

2. In the commissioner's consideration of whether the waterworks is unable to comply with a contaminant level required by this chapter (PMCL variance) because of the nature of the raw water source, the commissioner shall consider such factors as the following:

a. The availability and effectiveness of treatment methods for which the variance is requested.

b. Cost and other economic considerations such as implementing treatment,

improving the quality of the source water, or using an alternate source.

3. In the commissioner's consideration of whether a waterworks should be granted a variance to a required treatment technique because such treatment is unnecessary to protect the public health (treatment technique variance), the commissioner shall consider such factors as the following:

a. Quality of the water source including water quality data and pertinent sources of pollution.

b. Source protection measures employed by the waterworks.

4. In the commissioner's consideration of whether waterworks should be granted a variance to a required operational procedure or SMCL (operational variance), the commissioner shall consider such factors as the following:

a. The effect that such a variance would have on the adequate operation of the waterworks, including operator safety (in accordance with Virginia Occupational Safety and Health laws).

b. The cost and other economic considerations imposed by this requirement.

c. The effect that such a variance would have on the protection of the public health.

D. Disposition of a variance application.

1. The commissioner may reject any application for a variance by sending a rejection notice to the applicant. The rejection notice shall be in writing and shall state the reasons for the rejection. A rejection notice constitutes a case decision. The applicant has the right to petition for a hearing within 60 days of the date of the rejection to challenge the rejection pursuant to 12 VAC 5-590-160 and 12 VAC 5-590-180.

2. If the commissioner grants the variance, the applicant shall be notified in writing of this decision. Such notice shall identify the variance, the waterworks covered, and shall specify the period of time for which the variance will be effective.

a. For a PMCL variance as specified in subdivision A 1 of this section, such notice shall provide that the variance will be terminated when the waterworks comes into compliance with the applicable regulation and may be terminated upon a finding by the commissioner that the waterworks has failed to comply with any requirements of a final schedule issued pursuant to subdivision D 3 of this section.

b. For a treatment technique variance as specified in subdivision A 2 of this section, such notice shall provide that the variance may be terminated at any time upon a finding by the commissioner that the nature of the raw water source is such that the specified treatment technique for which the variance was granted is necessary to protect the public health or upon a finding that

the waterworks has failed to comply with monitoring and other requirements prescribed by the commissioner as a condition to the granting of the variance.

c. For an operational variance as specified in subdivision A 3 of this section, such notice shall provide that the variance will be terminated when the waterworks comes into compliance with the applicable regulation and may be terminated upon a finding by the commissioner that the waterworks has failed to comply with any requirements or schedules issued in conjunction with the variance. The effective date of the operational variance shall be the date of its issuance. A public hearing is not required before the issuance of an operational variance.

3. Schedules pursuant to PMCL and treatment technique variances:

a. The proposed schedule for compliance shall specify dates by which steps towards compliance are to be taken, including where applicable:

(1) Date by which arrangement for an alternative water source or improvement of existing raw water source will be completed.

(2) Date of connection to the alternative raw water source or improvement of the existing raw water source.

(3) Date by which final compliance is to be achieved.

b. If the waterworks has no access to an alternative raw water source and can effect or anticipate no adequate improvement of the existing raw water source, the proposed schedule may specify an indefinite time period for compliance until a new and effective treatment technology is developed, at which time a new compliance schedule shall be prescribed by the commissioner.

c. The schedule for implementation of interim control measures during the period of variance shall specify interim treatment techniques, methods, and equipment and dates by which steps toward meeting the interim control measures are to be met.

d. The schedule shall be prescribed by the commissioner at the time the variance is granted.

e. For a PMCL variance specified in subdivision A 1 of this section the commissioner shall propose a schedule for:

(1) Compliance (including increments of progress) by the waterworks with each contaminant level requirement covered by the variance; and

(2) Implementation by the waterworks of such control measures as the commissioner may require for each contaminant level covered by the variance.

E. Public hearings on PMCL and treatment technique variances and their schedules.

1. Notice of a public hearing shall be provided before a variance and schedule proposed by the commissioner pursuant to subsection D of this section may take effect. A notice given pursuant to the preceding sentence may cover the granting of more than one variance and a public hearing held pursuant to such notice shall include each of the variances covered by the notice.

2. Notice of a public hearing on an application for a variance and its schedule shall be advertised in at least one major newspaper of general circulation in the region in which the waterworks is located. The notice shall include a summary of the proposed variance and its schedule and shall contain the time, date, and place of the public hearing. If the schedule exceeds five years from the date of the variance, the rationale for the extended compliance schedule shall be discussed in the notice.

F. Issuance of variance.

1. Within 30 days after the public hearing, the commissioner shall, taking into consideration information obtained during such hearing, revise the proposed variance as necessary and prescribe the final schedule for compliance and interim measures for the waterworks granted a variance. If the schedule for compliance exceeds five years from the date of issuance of the variance, the commissioner shall document the rationale for the extended compliance schedule.

2. Such schedule shall establish the timetable by which the waterworks shall comply with each contaminant level and treatment technique requirement prescribed by this chapter. Such schedule shall also consider if the waterworks is to become part of a regional waterworks. Such schedule shall provide the shortest practicable time schedule under the circumstances.

G. Posting of variances. All variances granted to any waterworks are nontransferable. Each variance must be attached to the permit of the waterworks to which it is granted. Each variance is a condition to that permit and is revoked when the permit is revoked.

H. No variances shall be granted to the following sections of this chapter.

1. 12 VAC 5-590-380--Bacteriological quality; provided, however, that the commissioner may grant a variance to a waterworks owner that demonstrates that the violation of the total coliform PMCL is due solely to either a persistent growth of total coliforms in the distribution system rather than fecal or pathogenic contamination, a treatment lapse or deficiency, or a problem in the operation or maintenance of the distribution system.

2. 12 VAC 5-590-400--Radiological quality.

12 VAC 5-590-150. Exemptions.

A. The commissioner may grant an exemption to any primary maximum contaminant level (PMCL) or treatment technique requirement by following the procedures set forth

in this subsection. An exemption may be granted to a waterworks from any requirement with respect to a PMCL or treatment technique requirement upon a finding that:

1. The waterworks must be unable to implement measures to develop an alternative source of water supply;

2. The waterworks cannot reasonably make management or restructuring changes that will result in compliance or improve the quality of the drinking water;

3. Due to compelling factors (which may include economic factors), the waterworks is unable to comply with such contaminant level or treatment technique requirement;

4. The granting of the exemption will not result in an unreasonable risk to the health of persons served by the waterworks;

5. The waterworks was in operation on the effective date of such contaminant level or treatment technique requirement; and

6. The waterworks has not been granted a variance.

B. Application for exemption. A waterworks owner may request an exemption for a waterworks by submitting a written application to the appropriate field office for evaluation. All applications for an exemption shall include the following information:

1. A citation to the regulation from which the exemption is requested;

2. Nature and duration of the exemption requested;

3. Relevant analytical results of water quality sampling of the waterworks, including results of relevant tests conducted pursuant to the requirements of this chapter;

4. Explanation of the compelling factors such as time or economic factors which prevent such waterworks from achieving compliance;

5. Other information believed by the applicant to be pertinent to the application;

6. A proposed compliance schedule, including the date when each step toward compliance will be achieved; and

7. Such other information as may be required by the commissioner to make the determination.

C. Consideration of an exemption application.

1. The commissioner shall act on any exemption application submitted pursuant to subsection B of this section within 90 days of receipt of the application.

2. In the commissioner's consideration of whether the waterworks is unable to comply due to compelling factors, the commissioner shall consider such factors as the following:

a. Construction, installation, or modification of treatment equipment or

systems;

b. The time needed to put into operation a new treatment facility to replace an existing waterworks which is not in compliance;

c. The economic feasibility of compliance;

d. The availability of Drinking Water State Revolving Fund assistance or any other federal or state program that is reasonably likely to be available within the period of the exemption;

e. The consideration of rate increases, accounting changes, the appointment of a licensed operator under the state operator's licensure program, or contractual agreements for joint operation with one or more waterworks;

f. The activities consistent with Virginia's capacity development strategy to help the waterworks acquire and maintain technical, financial, and managerial capacity to come into compliance;

g. The ownership changes, physical consolidation with another waterworks, or other feasible and appropriate means of consolidation that would result in compliance; and

h. The availability of an alternative source of drinking water, including the feasibility of partnerships with neighboring waterworks, as identified by the waterworks or by the commissioner consistent with the capacity development strategy.

D. Disposition of an exemption application.

1. The commissioner may reject any application for an exemption by sending a rejection notice to the applicant. The rejection notice shall be in writing and shall state the reasons for the rejection. A rejection notice constitutes a case decision. The applicant has the right to petition for a hearing within 60 days of the date of the rejection to challenge the rejection pursuant to 12 VAC 5-590-160 and 12 VAC 5-590-180.

2. If the commissioner grants the exemption the applicant shall be notified in writing of this decision. Such notice shall identify the exemption, the waterworks covered, and shall specify the termination date of the exemption. Such notice shall provide that the exemption shall be terminated when the waterworks comes into compliance with the applicable regulation, and may be terminated upon a finding by the commissioner that the waterworks has failed to comply with any requirements of a final schedule issued pursuant to subsection F of this section.

3. The commissioner shall propose a schedule for:

a. Compliance (including increments of progress) by the waterworks with each contaminant level and treatment technique requirement covered by the exemption; and

b. Implementation by the waterworks of such control measures as the commissioner may require for each contaminant level and treatment technique requirement covered by the exemption.

4. The schedule shall be prescribed by the commissioner at the time the exemption is granted.

5. For waterworks that serve a population of not more than 3,300 persons and that needs financial assistance for the necessary improvements under the initial compliance schedule, an exemption granted by the commissioner may be for one or more additional two-year periods, but not to exceed a total of six additional years, only if the commissioner establishes that the waterworks is taking all practicable steps to meet the requirements of the exemption and the established compliance period. The commissioner will document the findings in granting an extension under this subdivision.

E. Public hearings on exemptions and their schedules.

1. Notice of a public hearing shall be provided before an exemption and schedule proposed by the commissioner pursuant to subsection D of this section may take effect. A notice given pursuant to the preceding sentence may cover the granting of more than one exemption and a public hearing held pursuant to such notice shall include each of the exemptions covered by the notice.

2. Notice of a public hearing on an application for an exemption and its schedule shall be advertised in at least one major newspaper of general circulation in the region in which the waterworks is located.

The notice shall include a summary of the proposed exemption and its schedule and shall contain the time, date, and place of the public hearing.

F. Issuance of exemption.

1. Within 30 days after the public hearing, the commissioner shall, taking into consideration information obtained during such hearing, revise the proposed exemption as necessary and prescribe the final schedule for compliance and interim measures for the waterworks granted an exemption.

2. Such schedule shall establish the timetable by which the waterworks shall comply with each contaminant level and treatment technique requirement prescribed by this chapter. If the schedule for compliance exceeds five years from the date of issuance of the exemption, the commissioner shall document the rationale for the extended compliance period. Such schedule shall also consider if the waterworks is to become part of a regional waterworks.

G. Posting of exemptions. All exemptions granted to any waterworks are nontransferable. Each exemption must be attached to the permit of the waterworks to which it is granted. Each exemption is a condition to that permit and is revoked when the permit is revoked.

H. No exemption shall be granted to the following sections of this chapter:

1. 12 VAC 5-590-380--Bacteriological quality; provided, however, that the commissioner may grant an exemption to a waterworks owner that demonstrates to the commissioner that the violation of the total coliform PMCL is due solely to either a persistent growth of total coliforms in the distribution system rather than fecal or pathogenic contamination, a treatment lapse or deficiency, or a problem in the operation or maintenance of the distribution system.

2. 12 VAC 5-590-400--Radiological quality.

3. 12 VAC 5-590-420 B 1 b--Residual disinfectant concentration.

12 VAC 5-590-160. Types of hearings.

Hearings before the board, the commissioner, or their designees shall include any of the following forms depending upon the nature of the controversy and the interests of the parties involved.

1. An informal hearing is a meeting with the district engineer and field director and held in accordance with § 9-6.14:11 of the Code of Virginia. The field director may consider all evidence presented at the meeting which is relevant to the issue in controversy. Presentation of evidence, however, is entirely voluntary. The field office has no subpoena power. No verbatim record will be taken at the informal hearing, but the field director may make preliminary findings of fact, and may submit a copy of those preliminary findings, with recommendations, to the commissioner and or division director for review. A copy of the findings shall be mailed to the appellant.

2. The adjudicatory hearing is a formal, public, adjudicatory proceeding before the commissioner or a designated hearing officer held in conformance with § 9-6.14:12. Pursuant to the hearings process:

a. A Notice which states the time, place, and issues involved in the prospective hearing shall be sent to parties requesting the hearing by certified mail at least 15 calendar days before the hearing is to take place;

b. A record of the hearing will be made by a court reporter or other approved means. A copy of the transcript of the hearing, if transcribed, will be provided within a reasonable time to any person upon written request and payment of the cost. If the record is not transcribed, then the cost of preparation of the transcript will be borne by the party requesting the transcript;

c. All interested parties may attend the hearing and present evidence, expert or otherwise, that is material and relevant to the issues in controversy. The admissibility of evidence shall be in accordance with the Administrative Process Act. All parties may be represented by counsel;

d. The commissioner or hearing officer, pursuant to § 9-9.14:13 of the Code of Virginia, may issue subpoenas for the attendance of witnesses and the

production of books, papers, maps, and records. The failure of a witness without legal excuse to appear or to testify or to produce documents may be reported by the commissioner to the appropriate circuit court; and

e. The commissioner may designate a hearing officer or subordinate to conduct the hearing, as provided in § 9-6.14:12 of the Code of Virginia, and to make written recommended findings of fact and conclusions of law to be submitted for review and final decision by the commissioner. The final decision of the commissioner shall be reduced to writing and will contain the explicit findings of fact upon which his decision is based. Copies of the decision shall be delivered to the owner affected by it. Notice of a decision will be served upon the parties and become a part of the record. Service may be by personal service or certified mail, return receipt requested.

3. A regulatory hearing is a public meeting of the board which is held for the purpose of adopting, amending, or repealing rules and regulations. A regulatory hearing requires that:

a. A notice shall be published, in at least one newspaper of general circulation in the commonwealth, not less than 60 days prior to the day on which the regulatory hearing is to be held. Such notice shall state the time, place, and nature of the hearing and the express terms or an informative survey of the rules that are to be adopted, amended, or repealed;

b. All interested persons may be present at the hearing and may present comments, arguments, objections, and evidence which concern the proposed rules; and

c. The board may adopt, repeal, or amend any rule or regulation which was included in the general notice published prior to the meeting. Rules and regulations may be adopted in the form in which they were described in the notice, or as amended at the hearing, provided the amendments do not alter the main purpose of the rule or regulation.

12 VAC 5-590-170. Request for hearing.

Any person may request a hearing by sending a request, in writing, to the appropriate field office or the central office.

12 VAC 5-590-180. Hearing as a matter of right.

Any person whose rights, duties or privileges have been or may be affected by any action or inaction of the board, its agents, or deputies in the administration of this chapter, shall have a right to both an informal and an adjudicatory hearing; however, the commissioner reserves the right to require participation in an informal hearing before granting the request for a full adjudicatory hearing.

12 VAC 5-590-190. Permits.

No owner or other person shall cause or allow the construction or change in the

manner of transmission, storage, purification, treatment, or distribution of water (including the extension of water pipes for the distribution of water) at any waterworks or water supply without a written construction permit from the commissioner. Furthermore, no owner or other person shall cause or permit any waterworks or water supply to be operated without a written operation permit issued by the commissioner which authorizes the operation of the waterworks or water supply. Conditions may be imposed on the issuance of any permit, and no waterworks or water supply may be constructed, modified, or operated in violation of these conditions.

12 VAC 5-590-200. Procedure for obtaining a construction permit.

Construction permits are issued by the Commissioner, but all requests for a construction permit are directed initially to the Field Office. The procedure for obtaining the permit includes the following steps: (i) the submission of an application, (ii) a preliminary engineering conference, (iii) the submission of an engineer's report (optional at the discretion of the Field Director), and (iv) the submission of plans, specifications, design criteria and other data in the number requested by the Division.

A. An application for a permit shall be submitted by the owner or authorized agent requesting permission to establish, construct, expand, modify, and/or operate a waterworks or water supply. The application shall clearly indicate whether the affected water supply is a community, nontransient noncommunity, or noncommunity waterworks.

B. A preliminary conference with the Division's appropriate District Engineer will be held. The applicant's engineer shall be prepared to set forth the water supply problems and the proposed solution in such a manner as to support his conclusions and recommendations.

C. The engineer's report and preliminary plans for waterworks shall present the following information where applicable:

1. General information - The report shall include:

a. A description of any existing waterworks and sewerage facilities.

b. Identification of the municipality or area served.

c. The name and mailing address of the owner.

2. Extent of waterworks system - The report shall include:

a. A description of the nature and extent of the area to be served.

b. Provisions for extending the waterworks system to include additional areas.

c. An appraisal of the future requirements for service, including existing and potential industrial, commercial, institutional and other water supply needs.

3. Alternate plans - Where two or more solutions exist for providing public water supply facilities, each of which is feasible and practicable, the report shall discuss the alternate plans and give reasons for selecting the one recommended,

including financial considerations.

4. Soil, groundwater conditions, and foundation problems - The report shall include:

a. A description of the character of the soil through which water mains are to be laid.

b. A description of foundation conditions prevailing at sites of proposed structures.

c. A description of the approximate elevation of ground water in relation to subsurface structures.

5. Water consumption - The report shall include:

a. A description of the population trends as indicated by available records, and the estimated population which will be served by the proposed water supply system or expanded system.

b. Present and estimated future water consumption values used as the basis of design.

c. Present and estimated future yield of the sources of supply.

6. Fire flow requirements - if fire flows are to be provided, the quantity of fire flow which will be made available by the proposed or enlarged system shall be given.

7. Sewerage system available - Describe the existing system and sewage treatment works, with special reference to its relationship to the existing or proposed waterworks which may affect the operation of the water supply system, or which may affect the quality of the water supply.

8. Source of water supply - Describe the proposed source or sources of water supply to be developed and the reasons for their selection by supplying the following data:

a. Surface water sources

(1) Hydrological data, stream flow, and weather records;

(2) Safe yield, including all factors that may affect it;

(3) Maximum flood flow, together with approval for safety features of spillway and dam from appropriate reviewing authority;

(4) Summarized quality of raw water with special references to fluctuation in quality, changing meteorological conditions, sources of contamination, measures to protect the watershed, etc.

b. Groundwater sources

(1) Sites considered,

(2) Advantages of site selected,

(3) Elevation with respect to surroundings and 100-year flood,

(4) Probable character of geological formations through which source is to be developed,

(5) Unusual geological conditions affecting site,

(6) Summary of source exploration, test well depth and method of construction, placement of liners or screens; pumping test, hours, capacity; water level and specified yield, water quality,

(7) Possible sources of contamination.

9. Proposed treatment processes - Summarize and establish the adequacy of proposed processes for the treatment of the specified water under consideration (pilot studies may be required).

10. Waste disposal - Discuss the various wastes from the water treatment plant, their volume, proposed treatment and points for discharge.

11. Automatic equipment - Provide supporting data justifying automatic equipment, including servicing.

12. Project sites - The report shall include:

a. A discussion on various sites considered and advantages of the recommended one,

b. A description of the proximity of residences, industries, and other establishments,

c. The location of potential sources of pollution that may influence the quality of the supply or interfere with the effective operation of the waterworks system, such as sewage absorption systems, septic tanks, privies, cesspools, sink holes, sanitary landfills, petroleum storage tanks, etc.

13. Financing - The report shall state:

a. The estimated cost of integral parts of the system,

b. The detailed estimated annual cost of operation,

c. The proposed method of financing, both capital charges and operating expenses.

14. Future extensions - Summarize planning for future needs and service.

D. Plans for waterworks improvements shall provide the following:

1. A general layout which includes:

a. Suitable title, to include name of waterworks,

b. Name of owner of waterworks,

c. Area or institution to be served,

d. Scale, in feet,

e. North Point,

f. Datum used,

g. Boundaries of the municipality or area to be served,

h. Date, address, and name of designing engineer,

i. Imprint of professional engineer's seal (see 12 VAC 5-590-220),

j. Legible prints suitable for microfilming, with size not to exceed 30 inches by 42 inches,

k. Location and size of existing water mains,

l. Location and nature of existing waterworks structures and appurtenances affecting the proposed improvements noted on one sheet.

2. Detailed plans which include where applicable:

a. Stream crossings, providing profiles with elevations of the stream bed and the normal and extreme high and low water levels,

b. Profiles having a horizontal scale of not more than 100 feet to the inch and a vertical scale of not more than 10 feet to the inch, with both scales clearly indicated,

c. Location and size of the property to be used for the groundwater development with respect to known references such as street intersections or section lines,

d. Topography and arrangement of present or planned wells or structures, with contour intervals not greater than two feet,

e. Elevation of highest known flood level, floor of structure, upper terminal of protective casing, and outside surrounding grade, using United States Coast and Geodetic Survey, United States Geological Survey, or equivalent elevations where applicable as reference,

f. Schematic drawing of well construction, showing diameter and depth of drillholes, casing and liner diameters and depths, grouting depths, elevations and designation of geological formation, water levels, and other details to describe the proposed well completely,

g. Location of all sources of pollution within 250 feet (or further, depending upon aquifer type and recharge area) of drilled wells, 100 feet of treated water storage facilities, five miles upstream from surface water intakes, and the entire drainage area of springs;

h. Size, length, identity and location or sewers, drains, water mains, and plant structures,

i. Schematic flow diagrams and hydraulic profiles showing the flow through various plant units,

j. Piping in sufficient detail to show flow through plant, including waste lines,

k. Location of all chemical feeding equipment and points of chemical application,

l. All appurtenances, specific structures, equipment, water treatment plant waste disposal units and point of discharge having any relationship to the plans for water mains and/or waterworks structures,

m. Location of sanitary or other facilities such as lavatories, showers, toilets, and lockers,

n. Location, dimensions and elevations of all proposed plant facilities,

o. Adequate description of all features not otherwise covered by the specifications.

E. Complete, detailed, technical specifications shall be supplied for the proposed project which include where applicable:

1. A program for keeping existing waterworks facilities in operation during construction of additional facilities so as to minimize interruption of service,

2. Laboratory facilities and equipment, as well as sampling taps and their locations,

3. Number and design of treatment process components,

4. Materials or proprietary equipment for sanitary or other facilities including any necessary backflow or backsiphonage protection,

5. Workmanship,

6. Other equipment.

F. A summary of complete design criteria shall be submitted for the proposed project, containing but not limited to the following where applicable:

1. Yield of source of supply,

2. Reservoir surface area,

3. Area of watershed,

4. Estimated water consumption,

5. Number of proposed services,

6. Fire-fighting requirements,

7. Basin capacities,

8. Retention times,

9. Unit loadings,
10. Filter area and proposed filtration rate,
11. Backwash rate,
12. Feeder capacities and ranges.

12 VAC 5-590-210. Formal requirements for the submission of engineering data.

In accordance with Article 1 (§ 54.1-400 et seq.) of Chapter 4 of Title 54.1 of the Code of Virginia, all drawings, specifications, and engineer's reports submitted for approval shall be prepared by or under the supervision of a licensed professional engineer legally qualified to practice in Virginia. The front cover of each set of drawings, of each copy of the engineer's report, and of each copy of the specifications submitted for review shall bear the signed imprint of the seal of the licensed professional engineer who prepared or supervised the preparation and be signed with an original signature. In addition, each drawing submitted shall bear an imprint or a legible facsimile of such seal. All reports, plans, and specifications shall be submitted to the field office at least 60 days prior to the date upon which action by the division is desired. If the plans and specifications are found to be incomplete or inadequate for detailed review, the plans and specifications will be returned to the submitting party. If revisions to the plans or specifications are necessitated, a letter will be sent to the engineer who prepared them outlining the necessary revisions. Revised plans or specifications constitute a resubmittal; however, the division will make every effort to complete the review of such revisions promptly. Preliminary plans and the engineer's report should be submitted for review prior to preparation of final plans.

12 VAC 5-590-220. Compliance with Manual of Practice.

A. The design guidelines set forth in the Manual of Practice (Part III) specify general criteria for the design and construction of waterworks. The division may impose standards or requirements which are more stringent than those contained in the Manual of Practice when required for critical areas or special conditions. Any such special standards or requirements with a federal mandate shall take precedence over the criteria in the manual and will be items which warrant careful consideration at the preliminary engineering conference, referenced in 12 VAC 5-590-200 B.

B. Designs submitted for waterworks must demonstrate that the system will adequately safeguard public health. Submissions which are in substantial compliance with the Manual of Practice or additional requirements of the department, as noted above, will be approved. Justification for a design may be required for those portions of the submitted design which differ from the criteria of the division, the Manual of Practice, or accepted engineering practices. Deviations from "shall" criteria which the design engineer, in his judgment, believes to be substantial in nature shall be identified and justified. The division may require changes in designs which are not in substantial compliance with the manual and which are not adequately justified by the engineer owner.

C. Final, complete, and detailed plans and specifications submitted in accordance with the provisions of 12 VAC 5-590-200 and 12 VAC 5-590-210 will be reviewed by the division as soon as practicable upon receipt. Such plans and specifications will be approved if they demonstrate substantial compliance with the design criteria set forth in the Manual of Practice and if the waterworks as constructed or modified, will be able to function in compliance with the operating regulations set forth in Part II. One set of the approved plans and specifications will be stamped by the division and returned to the owner.

12 VAC 5-590-230. Issuance of the construction permit.

Upon approval of the plans and specifications, the commissioner will issue a permit to the owner to construct or modify his waterworks or water supply in accordance with the approved plans and specifications.

12 VAC 5-590-240. Revisions of approved plans.

Any deviations from approved plans and specifications affecting capacity, hydraulic conditions, operating units, the functioning of water treatment processes, or the quality of water to be delivered must be approved by the division before any such changes are made. Revised plans and specifications shall be submitted in time to permit the review and approval of such plans or specifications before any construction work which will be affected by such changes is begun.

12 VAC 5-590-250. Statement required upon completion of construction.

Upon completion of the construction or modification of the waterworks the owner shall submit to the field office a statement signed by a licensed professional engineer stating that the construction work was completed in accordance with the approved plans and specifications, revised only in accordance with the provisions of 12 VAC 5-590-240. This statement shall be based upon inspections of the waterworks during and after construction or modifications, that are adequate to insure the truth of the statement.

12 VAC 5-590-260. Issuance of the operation permit.

Upon receipt of the 12 VAC 5-590-250 statement, the commissioner will issue an operating permit. However, the commissioner may delay the granting of the permit pending inspection by the field office to insure that the work has been satisfactorily completed.

12 VAC 5-590-270. Inspection and correction.

A. Within 30 days after placing a new or modified waterworks or water supply into operation, the owner shall test the water produced in a manner acceptable to the division. The field office will be notified of the time and place of the tests. Results of the tests will be sent to the field office.

B. The commissioner, a member of the board, or a member of the division has a right to inspect any waterworks or water supply and to be present for any testing in accordance with Title 32.1 of the Code of Virginia.

12 VAC 5-590-280. Procedure for obtaining a construction permit for well sources.

Since the quantity and quality of water from proposed wells cannot be anticipated, the following procedure shall be used:

1. Submittal of application--see 12 VAC 5-590-200 A.

2. Preliminary engineering conference--see 12 VAC 5-590-200 B.

3. When, upon inspection by the division's engineer, one or more well lots are found suitable for well sites, then tentative approval in writing will be furnished to the owner authorizing him to proceed with the drilling of the well or wells and this letter will specify the exact location on the lot where each well is to be drilled. Also, the letter will specify that the well shall be Class I or Class II, meeting the specifications set forth in Part III Article 2, Source Development. This tentative approval will become void after a 12-month period and the site must be reinspected before construction when so voided.

4. Submittal of engineer's report and preliminary plans--see 12 VAC 5-590-200 C.

5. Submittal of plans, specifications, and other data--see subsections D, E, and F of 12 VAC 5-590-200; 12 VAC 5-590-210 and 12 VAC 5-590-840. One of the following must also be submitted:

a. A copy of the plat plan showing that it has been duly recorded and signed by the clerk of the court, giving the deed book and page number and date of recording, will be required before a construction permit can be issued, or

b. If the well lot is identified on a recorded plan of the subdivision as a well lot, then this is acceptable, if recorded as required by this subsection.

In addition, a dedication document duly recorded with the clerk of the circuit court must be furnished stating that the well lot shall be used only for waterworks appurtenances as long as this lot is utilized as part of a waterworks.

6. Compliance with 12 VAC 5-590-220 through 12 VAC 5-590-270 is required.

12 VAC 5-590-290. Procedure for issuance of special permits for new or nonconventional methods, processes, and equipment.

A. Water treatment methods, processes, and equipment which are not covered by the design criteria of Part III or Part IV, and which in principle or application are new or nonconventional, are subject to a special permit application procedure in lieu of that set forth in 12 VAC 5-590-200. A special permit may be issued only after detailed review of all engineering data and after a period of extensive monitoring of plant performance.

B. The policy of the board is to encourage the development of any new or nonconventional methods, processes and equipment which, by virtue of treatability studies, appear to have application for the purification of raw water. However, these

new or nonconventional developments shall have been thoroughly tested in a full scale or representative pilot plant installation before approval of a plant utilizing this process and equipment can be employed. The result of this testing must be submitted to the field office. The testing required on new or nonconventional developments will generally follow these guidelines:

1. All procedures used in validating the process shall be conducted under the supervision of a licensed professional engineer experienced in the field of environmental engineering, the owner's engineering staff, or a testing firm acceptable to the division;

2. Samples shall be collected and analyzed in a manner which would demonstrate plant effectiveness and efficiency under adverse conditions and over extended periods of time in the area of the proposed installation;

3. The data shall be from continuous operation of a full scale or pilot plant treating the type of water to be handled;

4. Automatic indicating, recording, and totalizing flow measuring equipment shall be provided and total flow shall be recorded daily;

5. At installations treating surface waters, employing coagulation, flocculation, sedimentation, filtration, and disinfection, automatic indicating and recording equipment shall be provided for continuously monitoring the turbidity of the raw water, settled water, and each filter effluent, as well as pH monitoring of the treated water (flash mix effluent);

6. If the raw water source receives upstream discharges of treated industrial wastes or sewage effluents, automatic indicating and recording equipment shall be provided for continuously monitoring the pH of raw and finished water and chlorine residual of finished water;

7. The minimum sampling and analysis program will be established by the division in accordance with the process under investigation; and

8. All analyses shall be made in accordance with the most current edition of Standard Methods for the Examination of Water and Wastewater, published by the American Public Health Association, the American Water Works Association, and the Water Pollution Control Federation or analytical methods approved in advance by the division.

C. Detailed plans shall be submitted where possible showing how, in case of nonacceptance, the plant or unit will be converted to, or replaced with, a proven process. Also, financial resources must be assured to make the conversion (for example: funds placed in escrow or a bond posted).

D. After review of the plans and testing data, the commissioner will issue a construction permit if he is satisfied that the method, process, or equipment will efficiently produce water that will meet the operation standards of Part II, and that the method, process, or equipment may be converted to a conventional technique, if

necessary.

E. Upon completion of construction or modification, a provisional permit for a definite period of time will be issued for the operation of the new or nonconventional methods, processes, and equipment. Not more than one provisional permit will be granted during the evaluation period. The provisional permit shall require that:

1. The evaluation period shall be a minimum of 12 months and no longer than 18 months; and

2. The holder of a provisional permit must submit reports on operation during the evaluation period as required by the division. The reports shall be prepared by a licensed professional engineer experienced in the field of environmental engineering, the owner's operating or engineering staff, or a testing firm acceptable to the division.

F. The commissioner will issue an operation permit upon lapse of the provisional permit, if, on the basis of testing during that period, he finds that the new or nonconventional method, process, or equipment efficiently meets the operation standards of Part II. If the standards are not met, then the commissioner will issue an order which will require the alteration of the waterworks or water supply in a manner that will enable those standards to be met.

12 VAC 5-590-300. Procedure for obtaining a general permit for distribution mains.

In lieu of obtaining a permit for each distribution main project, an owner may elect to obtain a general permit for distribution mains. These general permits are issued by the commissioner, but all requests for a general permit are directed initially to the field office. The following procedure for obtaining the general permit shall be used:

1. The owner shall develop, adopt, and have division approval of general specifications and plan details covering water main design and construction.

2. The owner shall enter into a memorandum of understanding (MOU) with the division which outlines the following system-specific requirements, and the owner's method of compliance with such requirements:

a. The maximum size of pipe to be covered by the general permit;

b. The means for modifying the division approved general specifications and plan details;

c. The maintenance of engineering capabilities satisfactory to the division, either on-staff or through contractual arrangements;

d. The preparation of engineering plans and specifications for individual projects;

e. The maintenance of up-to-date distribution system maps and other appropriate records; and

f. The submission by the owner to the division of appropriate reports, including an annual report, concerning all projects constructed under the terms of the general permit and information concerning changes to the distribution system.

12 VAC 5-590-310. Amendment or reissuance of permits.

The commissioner may amend or reissue a permit where there is a change in the manner of storage, the treatment, or the source of supply of the water at the permitted location, or for any other cause incident to the protection of the public health, or for the supplying of pure water, provided notice is given to the owner, and, if one is required, a hearing held in accordance with the provisions of subdivisions 1 and 2 of 12 VAC 5-590-160.

12 VAC 5-590-320. Revocation or suspension of a permit.

A. The commissioner may suspend or revoke a permit in accordance with Administrative Process Act. Reasons for revocation of permits are as follows:

1. Failure to comply with the conditions of the permit;

2. Violation of Title 32.1 of the Code of Virginia or of any of this chapter from which no variance or exemption has been granted;

3. Change in ownership;

4. Abandonment of the waterworks and discontinuing the supplying of pure water; and

5. Any of the grounds specified in § 32.1-174 of the Code of Virginia.

B. When revoking or suspending permits in accordance with the above, the commissioner shall:

1. Send a written notice of intent to suspend or revoke by certified mail to the last known address of the waterworks owner. The notice shall state the reasons for the proposed suspension or revocation of the permit and shall give the time and place of the hearing; and

2. Provide at least 30 days advance notice of the hearing.

C. An owner who is given notice of intent to revoke or suspend his permit has a right to a hearing as specified in 12 VAC 5-590-160 and 12 VAC 5-590-180.

12 VAC 5-590-330. Monitoring, records, and reporting.

The commissioner or the division may require the owner or operator of any waterworks or water supply to install, use, and maintain monitoring equipment for the control and testing of water flowing through the plant. Sampling and testing shall be by methods approved by the division. Test results shall be recorded, compiled, and reported to the field office in a format approved by the division.

PART II. OPERATION REGULATIONS FOR WATERWORKS.

Article 1. General.

12 VAC 5-590-340. General.

All physical, chemical, bacteriological, or radiological analyses for the purpose of demonstrating compliance with primary and secondary maximum contaminant levels or action levels shall be performed by the Commonwealth of Virginia, Department of General Services, Division of Consolidated Laboratory Services (DCLS) or in laboratories certified by the Division of Consolidated Laboratory Services for such purposes. The owner is responsible for the collection and submission of all samples. A sample is deemed to have been collected only if and when its results are made known to the Division of Water Supply Engineering.

12 VAC 5-590-350. Sanitary surveys.

Frequent sanitary surveys shall be made by the owner of the water supply source and waterworks to locate and identify health hazards to the waterworks. The manner and frequency of making these surveys, and the rate at which discovered health hazards are to be removed, shall be in accordance with a program approved by the division. These surveys shall be submitted to the division for review. Every effort shall be made by the owner, to the extent of his jurisdiction, to prevent the degradation of the quality of water supply sources (see Appendix E). The division may also perform sanitary surveys.

12 VAC 5-590-360. Responsibility; owner.

A. The water utility owner or owner of the property served, to the extent of their respective jurisdictions, shall provide and maintain conditions through the entirety of the water supply system in a manner which will assure a high degree of capability and reliability to effect compliance with these standards. This requirement shall pertain to the source of supply, treatment, transmission, storage, and distribution facilities and the operation thereof. In addition, this requirement shall include specific and continuing assessment of the capability, effectiveness, and reliability of the treatment process in relation to potential contaminants in the source of supply. Finally, this requirement shall include the identification and evaluation of all factors having potential for impairing the quality of the water as delivered to customers and appropriate preventive and control measures.

B. For the purpose of application of this chapter, responsibility for the conditions in the water supply system shall be considered to be held by:

1. The owner from the source of supply to the customer's service connection; and

2. The owner of the property served and the municipal, county, or other authority having legal jurisdiction from the customer's service connection to the free-flowing outlet.

12 VAC 5-590-370. Sampling frequency.

The commissioner may exempt consecutive waterworks that obtain potable water from another water system for distribution from all monitoring requirements in this section except for bacteriological (subsection A of this section), disinfectant residuals, byproducts and disinfection byproduct precursors (subdivision B 3 of this section), and lead and copper (subdivision B 6 of this section). The required sampling frequencies are as follows:

A. Bacteriological.

1. The waterworks owner shall collect total coliform samples at sites which are representative of water throughout the distribution system according to a written sample siting report. The report shall be established or approved by the division after investigation of the source, method of treatment and storage, and protection of the water concerned. The report must include, but is not limited to, the following:

a. The frequency of sampling distributed evenly throughout the month/quarter.

b. Distribution map showing the generalized location where specific sampling sites will be selected.

c. Supporting statement explaining how specific individual sites are selected, how sampling will be rotated among the sites, how repeat samples will be collected and other information demonstrating that sampling will be conducted in a manner to comply with this chapter.

d. Adequate sampling points to provide sampling representative of all the conditions in the system.

e. For small systems (less than 3,301 population), sample sites must also be identified by address and code number location.

f. Minimum of three sample locations for each sample required monthly so repeat sample locations are previously ascertained as being adequate in number and five customer service connections upstream and downstream. (See Appendix J for an example.)

g. The sampling point required to be repeat sampled shall not be eliminated from future collections based on a history of questionable water quality unless the sampling point is unacceptable as determined by the division.

2. The minimum number of bacteriological samples for total coliform evaluation to be collected and analyzed monthly from the distribution system of a community or nontransient noncommunity waterworks shall be in accordance with Table 2.1. All noncommunity waterworks that use a surface water source or a groundwater source under the direct influence of surface water, and all large noncommunity (serving 1,000 or more persons per day) waterworks, shall collect and submit samples monthly for analysis in accordance with Table 2.1. All other

noncommunity waterworks shall submit samples for analysis each calendar quarter in accordance with Table 2.1.

3. The samples shall be taken at reasonably evenly spaced time intervals throughout the month or quarter.

If the results of a sanitary survey or other factors determine that some other frequency is more appropriate than that stated above, a modified sampling program report may be required. The altered frequency shall be confirmed or changed on the basis of subsequent surveys.

TABLE 2.1.

POPULATION SERVED PER DAY	MINIMUM NUMBER OF SAMPLES (See 12 VAC 5-590-370 A 2)
25 to 1,000	1
1,001 to 2,500	2
2,501 to 3,300	3
3,301 to 4,100	4
4,101 to 4,900	5
4,901 to 5,800	6
5,801 to 6,700	7
6,701 to 7,600	8
7,601 to 8,500	9
8,501 to 12,900	10
12,901 to 17,200	15
17,201 to 21,500	20
21,501 to 25,000	25
25,001 to 33,000	30
33,001 to 41,000	40
41,001 to 50,000	50
50,001 to 59,000	60
59,001 to 70,000	70
70,001 to 83,000	80
83,001 to 96,000	90

96,001 to 130,000	100
130,001 to 220,000	120
220,001 to 320,000	150
320,001 to 450,000	180
450,001 to 600,000	210
600,001 to 780,000	240
780,001 to 970,000	270
970,001 to 1,230,000	300
1,230,001 to 1,520,000	330
1,520,001 to 1,850,000	360
1,850,001 to 2,270,000	390

4. All bacteriological analyses shall be performed in accordance with 12 VAC 5-590-440 by the DCLS or by a laboratory certified by DCLS for drinking water samples.

B. Chemical. The location of sampling points, the chemicals measured, the frequency, and the timing of sampling within each compliance period shall be established or approved by the commissioner. The commissioner may increase required monitoring where necessary to detect variations within the waterworks. Analysis of field composite samples shall not be allowed. Samples for contaminants that may exhibit seasonal variations shall be collected during the period of the year when contamination is most likely to occur. Failure to comply with the sampling schedules in this section will require public notification pursuant to 12 VAC 5-590-540.

1. Inorganic chemical. Community and nontransient noncommunity waterworks owners shall conduct monitoring to determine compliance with the MCLs in Table 2.2 in accordance with this section. All other noncommunity waterworks owners shall conduct monitoring to determine compliance with the nitrate and nitrite PMCLs in Table 2.2 (as appropriate) in accordance with this section. Monitoring shall be conducted as follows:

a. The owner of any groundwater source waterworks with 150 or more service connections shall take a minimum of one sample at each entry point to the distribution system which is representative of each source, after treatment, unless a change in condition makes another sampling point more representative of each source or treatment plant (hereafter called a sampling point) starting in the compliance period beginning January 1, 1993. The owner of any groundwater source waterworks with fewer than 150 service connections shall take a minimum of one sample at each sampling point for asbestos, barium, cadmium, chromium, fluoride, mercury, nitrate, nitrite, and

selenium in the compliance period beginning January 1, 1993, and for antimony, beryllium, cyanide (as free cyanide), nickel, and thallium in the compliance period beginning January 1, 1996.

b. The owner of any waterworks which uses a surface water source in whole or in part with 150 or more service connections shall take a minimum of one sample at each entry point to the distribution system after any application of treatment or in the distribution system at a point which is representative of each source, after treatment, unless a change in conditions makes another sampling point more representative of each source or treatment plant (hereafter called a sampling point) beginning January 1, 1993. The owner of any waterworks which use a surface water source in whole or in part with fewer than 150 service connections shall take a minimum of one sample at each sampling point for asbestos, barium, cadmium, chromium, fluoride, mercury, nitrate, nitrite, and selenium beginning January 1, 1993, and for antimony, beryllium, cyanide (as free cyanide), nickel, and thallium beginning January 1, 1996.

c. If a waterworks draws water from more than one source and the sources are combined before distribution, the waterworks owner shall sample at an entry point to the distribution system during periods of normal operating conditions (i.e., when water is representative of all sources being used).

d. The frequency of monitoring for asbestos shall be in accordance with subdivision B 1 d (1) of this section; the frequency of monitoring for barium, cadmium, chromium, fluoride, mercury, and selenium shall be in accordance with subdivision B 1 d (2) of this section; the frequency of monitoring for antimony, beryllium, cyanide (as free cyanide), nickel, and thallium shall be in accordance with subdivision B 1 d (3) of this section; the frequency of monitoring for nitrate shall be in accordance with subdivision B 1 d (4) of this section; the frequency of monitoring for nitrite shall be in accordance with subdivision B 1 d (5) of this section; and the frequency of monitoring for arsenic shall be in accordance with subdivision B 1 d (6) of this section.

(1) The frequency of monitoring conducted to determine compliance with the PMCL for asbestos specified in Table 2.2 shall be conducted as follows:

(a) The owner of each community and nontransient noncommunity waterworks is required to monitor for asbestos during the first three-year compliance period of each nine-year compliance cycle beginning in the compliance period starting January 1, 1993.

(b) If the waterworks owner believes the waterworks is not vulnerable to either asbestos contamination in its source water or due to corrosion of asbestos-cement pipe, or both, the owner may apply to the commissioner for a waiver of the monitoring requirement in subdivision

B 1 d (1) (a) of this section. If the commissioner grants the waiver, the waterworks owner is not required to monitor.

(c) The commissioner may grant a waiver based on a consideration of the following factors:

(i) Potential asbestos contamination of the water source; and

(ii) The use of asbestos-cement pipe for finished water distribution and the corrosive nature of the water.

(d) A waiver remains in effect until the completion of the three-year compliance period. Waterworks not receiving a waiver shall monitor in accordance with the provisions of subdivision B 1 d (1) (a) of this section.

(e) The owner of a waterworks vulnerable to asbestos contamination due solely to corrosion of asbestos-cement pipe shall take one sample at a tap served by asbestos-cement pipe and under conditions where asbestos contamination is most likely to occur.

(f) The owner of a waterworks vulnerable to asbestos contamination due solely to source water shall monitor sampling points in accordance with subdivision B 1 of this section.

(g) The owner of a waterworks vulnerable to asbestos contamination due both to its source water supply and corrosion of asbestos-cement pipe shall take one sample at a tap served by asbestos-cement pipe and under conditions where asbestos contamination is most likely to occur.

(h) The owner of a waterworks which exceeds the PMCL as determined in 12 VAC 5-590-410 B 1 shall monitor quarterly beginning in the next quarter after the violation occurred.

(i) The commissioner may decrease the quarterly monitoring requirement to the frequency specified in subdivision B 1 d (1) (a) of this section provided the commissioner has determined that the waterworks is reliably and consistently below the PMCL. In no case can the commissioner make this determination unless the owner of a groundwater source waterworks takes a minimum of two quarterly samples or the owner of a waterworks which uses a surface water source in whole or in part takes a minimum of four quarterly samples.

(j) If monitoring data collected after January 1, 1990, are generally consistent with the requirements of subdivision B 1 d (1) of this section, then the commissioner may allow waterworks owner to use that data to satisfy the monitoring requirement for the initial compliance period beginning January 1, 1993.

(2) The frequency of monitoring conducted to determine compliance with the MCLs in Table 2.2 for barium, cadmium, chromium, fluoride, mercury, and selenium shall be as follows:

(a) The owner of a groundwater source waterworks shall take one sample at each sampling point during each compliance period beginning in the compliance period starting January 1, 1993.

(b) The owner of a waterworks which uses a surface water source in whole or in part shall take one sample annually at each sampling point beginning January 1, 1993.

(c) A waterworks owner may apply to the commissioner for a waiver from the monitoring frequencies specified in subdivision B 1 d (2) (a) or (b) of this section.

(d) A condition of the waiver shall require that the waterworks owner shall take a minimum of one sample while the waiver is effective. The term during which the waiver is effective shall not exceed one compliance cycle (i.e., nine years).

(e) The commissioner may grant a waiver provided the owner of a waterworks which uses a surface water source in whole or in part has monitored annually for at least three years and groundwater waterworks have conducted a minimum of three rounds of monitoring. (At least one sample shall have been taken since January 1, 1990.) The owner of any waterworks which uses a surface water source in whole or in part or a groundwater source waterworks shall demonstrate that all previous analytical results were less than the PMCL. Waterworks that use a new water source are not eligible for a waiver until three rounds of monitoring from the new source have been completed.

(f) In determining the appropriate reduced monitoring frequency, the commissioner shall consider:

(i) Reported concentrations from all previous monitoring;

(ii) The degree of variation in reported concentrations; and

(iii) Other factors which may affect contaminant concentrations such as changes in groundwater pumping rates, changes in the waterworks configuration, changes in the waterworks operating procedures, or changes in stream flows or characteristics.

(g) A decision by the commissioner to grant a waiver shall be made in writing and shall set forth the basis for the determination. The request for a waiver may be initiated by the commissioner or upon an application by the waterworks owner. The owner shall specify the basis for the request. The commissioner shall review and, where

appropriate, revise the determination of the appropriate monitoring frequency when the waterworks owner submits new monitoring data or when other data relevant to the waterworks appropriate monitoring frequency become available.

(h) Owners of waterworks which exceed the PMCLs as calculated in 12 VAC 5-590-410 shall monitor quarterly beginning in the next quarter after the violation occurred.

(i) The commissioner may decrease the quarterly monitoring requirement to the frequencies specified in subdivision B 2 d (2) (a), (b) or (c) of this section provided a determination has been made that the waterworks is reliably and consistently below the PMCL. In no case can the commissioner make this determination unless the owner of a groundwater source waterworks takes a minimum of two quarterly samples or the owner of a waterworks which uses a surface water source in whole or in part takes a minimum of four quarterly samples.

(3) The frequency of monitoring conducted to determine compliance with the PMCLs in Table 2.2 for antimony, beryllium, cyanide (as free cyanide), nickel, and thallium shall be as follows:

(a) The owner of a groundwater source waterworks with 150 or more service connections shall take one sample at each sampling point during each compliance period beginning in the compliance period starting January 1, 1993. The owner of a groundwater source waterworks with fewer than 150 service connections shall take one sample at each sampling point during each compliance period beginning in the compliance period starting January 1, 1996.

(b) The owner of a waterworks which uses a surface water source in whole or in part with 150 or more service connections shall take one sample annually at each sampling point beginning January 1, 1993. The owner of a waterworks which uses a surface water source in whole or in part with fewer than 150 service connections shall take one sample annually at each sampling point beginning January 1, 1996.

(c) A waterworks owner may apply to the commissioner for a waiver from the monitoring frequencies specified in subdivision B 2 d (3) (a) or (b) of this section.

(d) A condition of the waiver shall require that the waterworks owner shall take a minimum of one sample while the waiver is effective. The term during which the waiver is effective shall not exceed one compliance cycle (i.e., nine years).

(e) The commissioner may grant a waiver provided the owner of a waterworks which uses a surface water source in whole or in part has monitored annually for at least three years and groundwater

waterworks have conducted a minimum of three rounds of monitoring. (At least one sample shall have been taken since January 1, 1990.) The owner of any waterworks which uses a surface water source in whole or in part or a groundwater source waterworks shall demonstrate that all previous analytical results were less than the PMCL. Waterworks that use a new water source are not eligible for a waiver until three rounds of monitoring from the new source have been completed.

(f) In determining the appropriate reduced monitoring frequency, the commissioner shall consider:

(i) Reported concentrations from all previous monitoring;

(ii) The degree of variation in reported concentrations; and

(iii) Other factors which may affect contaminant concentrations such as changes in groundwater pumping rates, changes in the waterworks configuration, changes in the waterworks operating procedures, or changes in stream flows or characteristics.

(g) A decision by the commissioner to grant a waiver shall be made in writing and shall set forth the basis for the determination. The request for a waiver may be initiated by the commissioner or upon an application by the waterworks owner. The owner shall specify the basis for the request. The commissioner shall review and, where appropriate, revise the determination of the appropriate monitoring frequency when the waterworks owner submits new monitoring data or when other data relevant to the waterworks appropriate monitoring frequency become available.

(h) Owners of waterworks which exceed the PMCLs as calculated in 12 VAC 5-590-410 shall monitor quarterly beginning in the next quarter after the violation occurred.

(i) The commissioner may decrease the quarterly monitoring requirement to the frequencies specified in subdivision B 2 d (3) (a), (b) or (c) of this section provided a determination has been made that the waterworks is reliably and consistently below the PMCL. In no case can the commissioner make this determination unless the owner of a groundwater source waterworks takes a minimum of two quarterly samples or the owner of a waterworks which uses a surface water source in whole or in part takes a minimum of four quarterly samples.

(4) All community, nontransient noncommunity and noncommunity waterworks owners shall monitor to determine compliance with the PMCL for nitrate in Table 2.2.

(a) Owners of community and nontransient noncommunity waterworks

which use a groundwater source shall monitor annually beginning January 1, 1993.

(b) Owners of community and nontransient noncommunity waterworks which use a surface water source in whole or in part shall monitor quarterly beginning January 1, 1993.

(c) For community and nontransient noncommunity waterworks which use groundwater, the repeat monitoring frequency shall be quarterly for at least one year following any one sample in which the concentration is ≥50% of the PMCL. The commissioner may allow the owner of a waterworks, which uses groundwater, to reduce the sampling frequency to annually after four consecutive quarterly samples are reliably and consistently less than the PMCL.

(d) For community and nontransient noncommunity waterworks, the commissioner may allow the owner of a waterworks which uses a surface water source in whole or in part, to reduce the sampling frequency to annually if all analytical results from four consecutive quarters are ≤50% of the PMCL. Such waterworks shall return to quarterly monitoring if any one sample is ≥50% of the PMCL.

(e) The owners of all other noncommunity waterworks shall monitor annually beginning January 1, 1993.

(f) After the initial round of quarterly sampling is completed, the owner of each community and nontransient noncommunity waterworks which is monitoring annually shall take subsequent samples during the quarter(s) which previously resulted in the highest analytical result.

(5) All community, nontransient noncommunity and noncommunity waterworks owners shall monitor to determine compliance with the PMCL for nitrite in Table 2.2.

(a) All waterworks owners shall take one sample at each sampling point in the compliance period beginning January 1, 1993.

(b) After the initial sample, the owner of any waterworks where an analytical result for nitrite is ≤50% of the PMCL shall monitor at the frequency specified by the commissioner.

(c) The repeat monitoring frequency for any waterworks owner shall be quarterly for at least one year following any one sample in which the concentration is ≥50% of the PMCL. The commissioner may allow a waterworks owner to reduce the sampling frequency to annually after determining the analysis results are reliably and consistently less than the PMCL.

(d) Owners of waterworks which are monitoring annually shall take each subsequent sample during the quarter(s) which previously

resulted in the highest analytical result.

(6) The frequency of monitoring conducted to determine compliance with the PMCLs in Table 2.2 for arsenic shall be as follows:

(a) The owner of each community waterworks which use a surface water source in whole or in part shall take one sample annually at each sampling point beginning June 1, 1978.

(b) The owner of each community groundwater waterworks shall take one sample at each sampling point within a three year period starting June 1, 1979.

(c) Owners of waterworks which exceed the PMCL listed in Table 2.2 shall report to the commissioner within seven days and initiate three additional samples at the same sampling point within one month.

(d) For initial analyses required by subdivision B 1 d (6) (a) or (b) of this section, data for waterworks which use surface water source in whole or in part acquired within one year prior to the effective date for arsenic monitoring and data for groundwater waterworks acquired within three years prior to the effective date for arsenic monitoring may be substituted at the discretion of the commissioner.

2. Organic chemicals. Owners of all community and nontransient noncommunity waterworks shall sample for organic chemicals in accordance with their water source. Where two or more sources are combined before distribution, the waterworks owner shall sample at the entry point for the combined sources during periods of normal operating conditions.

a. Owners of waterworks which use groundwater shall take a minimum of one sample at each entry point to the distribution system which is representative of each source, after treatment (hereafter called a sampling point).

b. Owners of waterworks which use a surface water source in whole or in part shall take a minimum of one sample at points in the distribution system that are representative of each source or at each entry point to the distribution system, after treatment (hereafter called a sampling point).

c. The owner of each community and nontransient noncommunity waterworks shall take four consecutive quarterly samples for each contaminant listed in Table 2.3-VOC 2 through 21 and SOC during each compliance period, beginning in the compliance period starting January 1, 1993.

d. Reduced monitoring.

(1) VOC.

(a) If the initial monitoring for contaminants listed in Table 2.3-VOC 1 through 8 and the monitoring for the contaminants listed in Table 2.3-VOC 9 through 21 as allowed in subdivision B 2 d (1) (c) of this section

has been completed by December 31, 1992, and the waterworks did not detect any contaminant listed in Table 2.3-VOC 1 through 21, then the owner of each groundwater waterworks and waterworks which use a surface water source in whole or in part shall take one sample annually beginning January 1, 1993.

(b) After a minimum of three years of annual sampling, the commissioner may allow the owner of a groundwater waterworks with no previous detection of any contaminant listed in Table 2.3-VOC 2 through 21 to take one sample during each compliance period.

(c) The commissioner may allow the use of monitoring data collected after January 1, 1988, for purposes of initial monitoring compliance. If the data are generally consistent with the other requirements in this section, the commissioner may use these data (i.e., a single sample rather than four quarterly samples) to satisfy the initial monitoring requirement of subdivision B 2 c of this section. Waterworks which use grandfathered samples and did not detect any contaminants listed in Table 2.3-VOC, 2 through 21, shall begin monitoring annually in accordance with subdivision B 2 d (1) (a) of this section beginning January 1, 1993.

(2) SOC.

(a) Waterworks serving more than 3,300 persons which do not detect a contaminant listed in Table 2.3-SOC in the initial compliance period, may reduce the sampling frequency to a minimum of two quarterly samples in one year during each repeat compliance period.

(b) Waterworks serving less than or equal to 3,300 persons which do not detect a contaminant listed in Table 2.3-SOC in the initial compliance period may reduce the sampling frequency to a minimum of one sample during each repeat compliance period.

e. Waiver application.

(1) For VOCs. The owner of any community and nontransient noncommunity groundwater waterworks which does not detect a contaminant listed in Table 2.3-VOC may apply to the commissioner for a waiver from the requirements of subdivisions B 2 d (1) (a) and (b) of this section after completing the initial monitoring. A waiver shall be effective for no more than six years (two compliance periods). The commissioner may also issue waivers to small systems for the initial round of monitoring for 1,2,4-trichlorobenzene.

(2) For SOCs. The owner of any community and nontransient noncommunity waterworks may apply to the commissioner for a waiver from the requirement of subdivisions B 2 c and d (2) of this section. The waterworks owner shall reapply for a waiver for each compliance period.

f. The commissioner may grant a waiver after evaluating the following factors: Knowledge of previous use (including transport, storage, or disposal) of the contaminant within the watershed or zone of influence of the source. If a determination by the commissioner reveals no previous use of the contaminant within the watershed or zone of influence, a waiver may be granted. If previous use of the contaminant is unknown or it has been used previously, then the following factors shall be used to determine whether a waiver is granted.

(1) Previous analytical results.

(2) The proximity of the waterworks to a potential point or nonpoint source of contamination. Point sources include spills and leaks of chemicals at or near a waterworks or at manufacturing, distribution, or storage facilities, or from hazardous and municipal waste landfills and other waste handling or treatment facilities. Nonpoint sources for SOCs include the use of pesticides to control insect and weed pests on agricultural areas, forest lands, home and gardens, and other land application uses.

(3) The environmental persistence and transport of the contaminants listed in Table 2.3 VOC and SOC.

(4) How well the water source is protected against contamination, such as whether it is a waterworks which uses a surface water source in whole or in part or whether it is a groundwater source waterworks. Groundwater source waterworks shall consider factors such as depth of the well, the type of soil, wellhead protection, and well structure integrity. Waterworks which use surface water in whole or in part shall consider watershed protection.

(5) Special factors.

(a) For VOCs. The number of persons served by the waterworks and the proximity of a smaller waterworks to a larger waterworks.

(b) For SOCs. Elevated nitrate levels at the waterworks supply source.

(c) For SOCs. Use of PCBs in equipment used in the production, storage, or distribution of water (i.e., PCBs used in pumps, transformers, etc.).

g. Condition for waivers.

(1) As a condition of the VOC waiver the owner of a groundwater waterworks shall take one sample at each sampling point during the time the waiver is effective (i.e., one sample during two compliance periods or six years) and update its vulnerability assessment considering the factors listed in subdivision B 2 f of this section. Based on this vulnerability assessment the commissioner shall reconfirm that the waterworks owner is nonvulnerable. If the commissioner does not make this reconfirmation

within three years of the initial determination, then the waiver is invalidated and the waterworks is required to sample annually as specified in subdivision B 2 d (1) (a) of this section.

(2) The owner of any community and nontransient noncommunity waterworks which use surface water in whole or in part which does not detect a contaminant listed in Table 2.3-VOC may apply to the commissioner for a waiver from the requirements of subdivision B 2 d (1) (a) of this section after completing the initial monitoring. Waterworks meeting this criteria shall be determined by the commissioner to be nonvulnerable based on a vulnerability assessment during each compliance period. Each waterworks receiving a waiver shall sample at the frequency specified by the commissioner (if any).

(3) There are no conditions to SOC waivers.

h. If a contaminant listed in Table 2.3-VOC 2 through 21 or SOC 1 through 33 is detected then (NOTE: Detection occurs when a contaminant level exceeds the current detection limit as defined by EPA.):

(1) Each waterworks owner shall monitor quarterly at each sampling point which resulted in a detection.

(2) The commissioner may decrease the quarterly monitoring requirement specified in subdivision B 2 h (1) of this section provided it has determined that the waterworks is reliably and consistently below the PMCL. In no case shall the commissioner make this determination unless a groundwater waterworks takes a minimum of two quarterly samples and a waterworks which use surface water in whole or in part takes a minimum of four quarterly samples.

(3) If the commissioner determines that the waterworks is reliably and consistently below the PMCL, the commissioner may allow the waterworks to monitor annually. Waterworks which monitor annually shall monitor during the quarter(s) which previously yielded the highest analytical result.

(4) Waterworks which have three consecutive annual samples with no detection of a contaminant may apply to the commissioner for a waiver for VOC as specified in subdivision B 2 e (1) or to SOC as specified in subdivision B 2 e (2) of this section.

(5) Subsequent monitoring due to contaminant detection.

(a) Groundwater waterworks which have detected one or more of the following two-carbon organic compounds: trichloroethylene, tetrachloroethylene, 1,2-dichloroethane, 1,1,1-trichloroethane, cis-1,2-dichloroethylene, trans-1,2-dichloroethylene, or 1,1-dichloroethylene shall monitor quarterly for vinyl chloride. A vinyl chloride sample shall be taken at each sampling point at which one or more of the two-

carbon organic compounds was detected. If the results of the first analysis do not detect vinyl chloride, the commissioner may reduce the quarterly monitoring frequency of vinyl chloride monitoring to one sample during each compliance period. Waterworks which use surface water in whole or in part are required to monitor for vinyl chloride as specified by the commissioner.

(b) If monitoring results in detection of one or more of certain related contaminants (heptachlor and heptachlor epoxide), then subsequent monitoring shall analyze for all related contaminants.

i. Waterworks which violate the requirements of Table 2.3 for VOCs or SOCs, as determined by 12 VAC 5-590-410 C, shall monitor quarterly. After a minimum of four consecutive quarterly samples which show the waterworks is in compliance as specified in 12 VAC 5-590-410 C and the commissioner determines that the waterworks is reliably and consistently below the PMCL, the waterworks may monitor at the frequency and time specified in subdivision B 2 h (3) of this section.

3. Disinfectant residuals, disinfection byproducts and disinfection byproduct precursors.

a. Unless otherwise noted, all waterworks that use a chemical disinfectant must comply with the requirements of this section as follows:

(1) Community or nontransient noncommunity waterworks that use surface water or groundwater under the direct influence of surface water and serving 10,000 or more persons, must comply with this section beginning January 1, 2002.

(2) Community or nontransient noncommunity waterworks that use surface water or groundwater under the direct influence of surface water serving fewer than 10,000 persons and waterworks using only groundwater not under the direct influence of surface water must comply with this section beginning January 1, 2004.

(3) Transient noncommunity waterworks which use surface water or groundwater under the direct influence of surface water and serving 10,000 or more persons and using chlorine dioxide as a disinfectant or oxidant must comply with any requirements for chlorine dioxide in this section beginning January 1, 2002.

(4) Transient noncommunity waterworks which use surface water or groundwater under the direct influence of surface water serving fewer than 10,000 persons and using chlorine dioxide as a disinfectant or oxidant and waterworks using only groundwater not under the direct influence of surface water and using chlorine dioxide as a disinfectant or oxidant must comply with any requirements for chlorine dioxide in this section beginning January 1, 2004.

b. Waterworks must take all samples during normal operating conditions.

(1) Analysis under this section for disinfection byproducts (TTHM, HAA5, chlorite and bromate) must be conducted by a laboratory that has received certification by EPA or the state except as noted in subdivision B 3 b (2) of this section.

(2) Measurement under this section of daily chlorite samples at the entry point to the distribution system, disinfection residuals (free chlorine, combined chlorine, total chlorine and chlorine dioxide), alkalinity, bromide, TOC, SUVA (DOC and UV_{254}), and pH must be made by a party approved by the commissioner.

(3) DPD colorimetric test kits may be used to measure residual disinfectant concentrations for chlorine, chloramines and chlorine dioxide.

c. Failure to monitor in accordance with the monitoring plan required under subdivision B 3 j of this section is a monitoring violation. Failure to monitor will be treated as a violation for the entire period covered by the annual average where compliance is based on a running annual average of monthly or quarterly samples or averages and the waterworks' failure to monitor makes it impossible to determine compliance with PMCLs or MRDLs.

d. Waterworks may use only data collected under the provisions of this section or the US EPA Information Collection Rule, 40 CFR Part 141 Subpart M, Information Collection Requirements (ICR) for Public Water Systems, to qualify for reduced monitoring.

e. TTHM/HAA5 monitoring. Community or nontransient noncommunity waterworks must monitor TTHM and HAA5 at the frequency indicated below:

(1) Routine monitoring requirements.

(a) Waterworks using surface water or groundwater under the direct influence of surface water and serving at least 10,000 persons must collect four water samples per quarter per treatment plant. At least 25% of all samples collected each quarter must be at locations representing maximum residence time in the distribution system. The remaining samples must be taken at locations representative of at least average residence time in the distribution system and representative of the entire distribution system. When setting the sample locations the waterworks must take into account number of persons served, different sources of water, and different treatment methods.

(b) Waterworks using surface water or groundwater under the direct influence of surface water and serving from 500 to 9,999 persons must collect one sample per quarter per treatment plant. The sample location must represent maximum residence time in the distribution

system.

(c) Waterworks using surface water or groundwater under the direct influence of surface water and serving fewer than 500 persons must collect one sample per year per treatment plant during the month of warmest water temperature. The sample location must represent maximum residence time in the distribution system. If the sample (or average of annual samples, if more than one sample is taken) exceeds PMCL in Table 2.13, the waterworks must increase monitoring to one sample per treatment plant per quarter, taken at a point reflecting the maximum residence time in the distribution system, until waterworks meets reduced monitoring criteria.

(d) Waterworks using only groundwater not under direct influence of surface water using chemical disinfectant and serving at least 10,000 persons must collect one sample per quarter per treatment plant. The sample location must represent maximum residence time in the distribution system.

(e) Waterworks using only groundwater not under direct influence of surface water using chemical disinfectant and serving fewer than 10,000 persons must collect one sample per year per treatment plant during the month of warmest water temperature. The sample location must represent maximum residence time in the distribution system. If the sample (or average of annual samples, if more than one sample is taken) exceeds PMCL in Table 2.13, the waterworks must increase monitoring to one sample per treatment plant per quarter, taken at a point reflecting the maximum residence time in the distribution system, until the waterworks meets the criteria for reduced monitoring found in subdivision B 3 e (4) of this section.

(f) If a waterworks elects to sample more frequently than the minimum required, at least 25% of all samples collected each quarter (including those taken in excess of the required frequency) must be taken at locations that represent the maximum residence time of the water in the distribution system. The remaining samples must be taken at locations representative of at least average residence time in the distribution system.

(g) With prior approval of the commissioner, waterworks that utilize multiple wells from a common aquifer may consider these multiple sources as one treatment plant for determining the minimum number of samples to be collected for TTHM and HAA5 analysis.

(2) After one year of routine monitoring a waterworks may reduce monitoring, except as otherwise provided, as follows:

(a) Waterworks using surface water or groundwater under the direct

influence of surface water and serving at least 10,000 persons that has a source water annual average TOC level, before any treatment, of equal to or less than 4.0 mg/L and a TTHM annual average equal to or less than 0.040 mg/L and HAA5 annual average equal to or less than 0.030 mg/L may reduce its monitoring to one sample per treatment plant per quarter at a distribution system location reflecting maximum residence time.

(b) Waterworks using surface water or groundwater under the direct influence of surface water serving from 500 to 9,999 persons that has a source water annual average TOC level, before any treatment, equal to or less than 4.0 mg/L and a TTHM annual average equal to or less than 0.040 mg/L and HAA5 annual average equal to or less than 0.030 mg/L may reduce its monitoring to one sample per treatment plant per year at a distribution system location reflecting maximum residence time during the month of warmest water temperature.

(c) Waterworks using only groundwater not under the direct influence of surface water, using chemical disinfectant and serving at least 10,000 persons that has a TTHM annual average of equal to or less than 0.040 mg/L and HAA5 annual average of equal to or less than 0.030 mg/L may reduce its monitoring to one sample per treatment plant per year at a distribution system location reflecting maximum residence time during the month of warmest water temperature.

(d) Waterworks using only groundwater not under the direct influence of surface water, using chemical disinfectant and serving fewer than 10,000 persons that has a TTHM annual average equal to or less than 0.040 mg/L and HAA5 annual average equal to or less than 0.030 mg/L for two consecutive years or TTHM annual average equal to or less than 0.020 mg/L and HAA5 annual average of equal to or less than 0.015 mg/L for one year may reduce its monitoring to one sample per treatment plant per three-year monitoring cycle at a distribution system location reflecting maximum residence time during the month of warmest water temperature, with the three-year cycle beginning on January 1 following the quarter in which the system qualifies for reduced monitoring.

(e) Waterworks using surface water or groundwater under the direct influence of surface water serving fewer than 500 persons may not reduce its monitoring to less than one sample per treatment plant per year.

(3) Waterworks on a reduced monitoring schedule may remain on that reduced schedule as long as the average of all samples taken in the year (for waterworks that must monitor quarterly) or the result of the sample (for waterworks that must monitor no more frequently than annually) is no

more than 0.060 mg/L and 0.045 mg/L for TTHMs and HAA5, respectively. Waterworks that do not meet these levels must resume monitoring at the frequency identified in subdivision B 3 e (1) of this section in the quarter immediately following the quarter in which the waterworks exceeds 0.060 mg/L or 0.045 mg/L for TTHMs or HAA5, respectively. For waterworks using only groundwater not under the direct influence of surface water and serving fewer than 10,000 persons, if either the TTHMs annual average is greater than 0.080 mg/L or the HAA5 annual average is greater than 0.060 mg/L, the waterworks must go to increased monitoring identified in subdivision B 3 e (1) of this section in the quarter immediately following the monitoring period in which the system exceeds 0.080 mg/L or 0.060 mg/L for TTHM or HAA5 respectively.

(4) Waterworks on increased monitoring may return to routine monitoring if, after at least one year of monitoring, their TTHM annual average is equal to or less than 0.060 mg/L and their HAA5 annual average is equal to or less than 0.045 mg/L.

(5) The commissioner may return a waterworks to routine monitoring at the commissioner's discretion.

f. Chlorite. Community and nontransient noncommunity waterworks using chlorine dioxide, for disinfection or oxidation, must conduct monitoring for chlorite.

(1) Routine monitoring.

(a) Daily monitoring. Waterworks must take daily samples at the entrance to the distribution system. For any daily sample that exceeds the chlorite PMCL in Table 2.13, the waterworks must take additional samples in the distribution system the following day at the locations required by subdivision B 3 f (1) (c) of this section, in addition to the sample required at the entrance to the distribution system.

(b) Monthly monitoring. Waterworks must take a three-sample set each month in the distribution system. The waterworks must take one sample at each of the following locations: near the first customer, at a location representative of average residence time, and at a location reflecting maximum residence time in the distribution system. Any additional routine sampling must be conducted in the same manner (as three-sample sets, at the specified locations). The waterworks may use the results of additional monitoring conducted under subdivision B 3 f (1) (c) of this section to meet the requirement for monitoring in this paragraph.

(c) Additional monitoring requirements. On each day following a routine sample monitoring result that exceeds the chlorite PMCL in Table 2.13 at the entrance to the distribution system, the waterworks is required to

take three chlorite distribution system samples at the following locations: as close to the first customer as possible, in a location representative of average residence time, and as close to the end of the distribution system as possible (reflecting maximum residence time in the distribution system).

(2) Reduced monitoring.

(a) Chlorite monitoring at the entrance to the distribution system required by subdivision B 3 f (1) (a) of this section may not be reduced.

(b) Chlorite monitoring in the distribution system required by subdivision B 3 f (1) (b) of this section may be reduced to one three-sample set per quarter after one year of monitoring where no individual chlorite sample taken in the distribution system under subdivision B 3 f (1) (b) of this section has exceeded the chlorite PMCL in Table 2.13 and the waterworks has not been required to conduct monitoring under subdivision B 3 f (1) (c) of this section. The waterworks may remain on the reduced monitoring schedule until either any of the three individual chlorite samples taken quarterly in the distribution system under subdivision B 3 f (1) (b) of this section exceeds the chlorite PMCL or the waterworks is required to conduct monitoring under subdivision B 3 f (1) (c) of this section, at which time the waterworks must revert to routine monitoring.

g. Bromate.

(1) Each community and nontransient noncommunity waterworks treatment plant using ozone, for disinfection or oxidation, must take one sample per month and analyze it for bromate. Waterworks must take samples monthly at the entrance to the distribution system while the ozonation system is operating under normal conditions.

(2) Waterworks required to analyze for bromate may reduce monitoring from monthly to once per quarter, if the waterworks demonstrates that the average source water bromide concentration is less than 0.05 mg/L based upon representative monthly bromide measurements for one year. The waterworks may remain on reduced bromate monitoring until the running annual average source water bromide concentration, computed quarterly, is equal to or greater than 0.05 mg/L based upon representative monthly measurements. If the running annual average source water bromide concentration is equal to or greater than 0.05 mg/L, the waterworks must resume routine monitoring required by subdivision B 3 g (1) of this section.

(3) Bromide. Waterworks required to analyze for bromate may reduce bromate monitoring from monthly to once per quarter, if the waterworks demonstrates that the average source water bromide concentration is less than 0.05 mg/L based upon representative monthly measurements for one

year. The waterworks must continue bromide monitoring to remain on reduced bromate monitoring.

h. Monitoring requirements for disinfectant residuals.

(1) Chlorine and chloramines.

(a) Waterworks that use chlorine or chloramines must measure the residual disinfectant level in the distribution system at the same point in the distribution system and at the same time as total coliforms are sampled, as specified in subsection A of this section. Waterworks that use surface water or groundwater under the direct influence of surface water may use the results of residual disinfectant concentration sampling found in subdivision B 7 c (1) of this section in lieu of taking separate samples.

(b) Residual disinfectant level monitoring may not be reduced.

(2) Chlorine dioxide.

(a) Waterworks that use chlorine dioxide for disinfection or oxidation must take daily samples at the entrance to the distribution system. For any daily sample that exceeds the MRDL in Table 2.12, the waterworks must take samples in the distribution system the following day at the locations required by subdivision B 3 h (2) (b) of this section, in addition to the sample required at the entrance to the distribution system.

(b) On each day following a routine sample monitoring result that exceeds the MRDL in Table 2.12, the waterworks is required to take three chlorine dioxide distribution system samples. If chlorine dioxide or chloramines are used to maintain a disinfectant residual in the distribution system, or if chlorine is used to maintain a disinfectant residual in the distribution system and there are no disinfection addition points after the entrance to the distribution system (i.e., no booster chlorination), the waterworks must take three samples as close to the first customer as possible, at intervals of at least six hours. If chlorine is used to maintain a disinfectant residual in the distribution system and there are one or more disinfection addition points after the entrance to the distribution system (i.e., booster chlorination), the waterworks must take one sample at each of the following locations: as close to the first customer as possible, in a location representative of average residence time, and as close to the end of the distribution system as possible (reflecting maximum residence time in the distribution system).

(c) Chlorine dioxide monitoring may not be reduced.

i. Monitoring requirements for disinfection byproduct precursors (DBPP).

(1) Community or nontransient noncommunity waterworks using surface water or groundwater under the direct influence of surface water and using conventional filtration treatment (as defined in 12 VAC 5-590-10) must monitor each treatment plant for TOC no later than the point of combined filter effluent turbidity monitoring and representative of the treated water. All waterworks required to monitor under this subdivision (B 3 i (1)) must also monitor for TOC in the source water prior to any treatment at the same time as monitoring for TOC in the treated water. These samples (source water and treated water) are referred to as paired samples. At the same time as the source water sample is taken, all waterworks must monitor for alkalinity in the source water prior to any treatment. Waterworks must take one paired sample and one source water alkalinity sample per month per plant at a time representative of normal operating conditions and influent water quality.

(2) Community or nontransient noncommunity waterworks that use surface water or groundwater under the direct influence of surface water with an average treated water TOC of less than 2.0 mg/L for two consecutive years, or less than 1.0 mg/L for one year, may reduce monitoring for both TOC and alkalinity to one paired sample and one source water alkalinity sample per plant per quarter. The waterworks must revert to routine monitoring in the month following the quarter when the annual average treated water TOC equal to or greater than 2.0 mg/L.

j. Each waterworks required to monitor under subdivision B 3 of this section must develop and implement a monitoring plan. The waterworks must maintain the plan and make it available for inspection by the commissioner and the general public no later than 30 days following the applicable compliance dates in subdivision B 3 a of this section. All community or nontransient noncommunity waterworks that use surface water or groundwater under the direct influence of surface water serving more than 3,300 people must submit a copy of the monitoring plan to the commissioner no later than the date of the first report required under 12 VAC 5-590-530 A. The commissioner may also require the plan to be submitted by any other waterworks. After review, the commissioner may require changes in any plan elements. The plan must include at least the following elements:

(1) Specific locations and schedules for collecting samples for any parameters included in subdivision B 3 of this section.

(2) How the waterworks will calculate compliance with PMCLs, MRDLs, and treatment techniques.

(3) The sampling plan for a consecutive waterworks must reflect the entire consecutive distribution system.

4. Unregulated contaminants (UCs). All community and nontransient

noncommunity waterworks shall sample for the contaminants listed in Table 2.6 and Table 2.7 as follows:

a. Table 2.6--Group A

(1) Owners of waterworks which use a surface water source in whole or in part shall sample at the entry points to the distribution system which is representative of each source, after treatment (hereafter called a sampling point). The minimum number of samples is one year of consecutive quarterly samples per sampling point beginning in accordance with Table 2.8.

(2) Owners of waterworks which use groundwater shall sample at points of entry to the distribution system which is representative of each source (hereafter called a sampling point). The minimum number of samples is one sample per sampling point beginning in accordance with Table 2.8.

(3) The commissioner may require a confirmation sample for positive or negative results.

(4) Waterworks serving less than 150 connections may inform the commissioner, in writing, that their waterworks is available for sampling instead of performing the required sampling.

(5) All waterworks required to sample under this section shall repeat the sampling at least every five years.

b. Table 2.6--Group B and Table 2.7

(1) The owner of each community and nontransient noncommunity waterworks owner shall take four consecutive quarterly samples at the entry points to the distribution system which is representative of each source (hereafter called a sampling point) for each contaminant listed in Table 2.6 Group B and report the results to the commissioner. Monitoring shall be completed by December 31, 1995.

(2) The owner of each community and nontransient noncommunity waterworks shall take one sample at each sampling point for each contaminant listed in Table 2.7 and report the results to the commissioner. Monitoring shall be completed by December 31, 1995.

(3) The owner of each community and nontransient noncommunity waterworks may apply to the commissioner for a waiver from the monitoring requirements of subdivisions B 4 b (1) and (2) of this section for the contaminants listed in Table 2.6 Group B and Table 2.7.

(4) The commissioner may grant a waiver for the requirement of subdivision B 4 b (1) of this section based on the criteria specified in subdivision B 2 f of this section. The commissioner may grant a waiver from the requirement of subdivision B 4 b (2) of this section if previous

analytical results indicate contamination would not occur, provided this data was collected after January 1, 1990.

(5) If the waterworks utilizes more than one source and the sources are combined before distribution, the waterworks shall sample at an entry point to the distribution system during periods of normal operating conditions (i.e., when water is representative of all sources being used).

(6) The commissioner may require a confirmation sample for positive or negative results.

(7) Instead of performing the monitoring required by this section, the owner of a community waterworks or nontransient noncommunity waterworks serving fewer than 150 service connections may send a letter to the commissioner stating that the waterworks is available for sampling. This letter shall be sent to the commissioner by January 1, 1994. The waterworks shall not send such samples to the commissioner unless requested to do so by the commissioner.

(8) All waterworks required to sample under this section shall repeat the sampling at least every five years.

5. Repealed.

6. Monitoring requirements for lead and copper. The owners of all community and nontransient noncommunity waterworks shall monitor for lead and copper in tap water (subdivision B 6 a of this section), water quality (corrosion) parameters in the distribution system and at entry points (subdivision B 6 b of this section), and lead and copper in water supplies (subdivision B 6 c of this section). The monitoring requirements contained in this section are summarized in Appendix M.

a. Monitoring requirements for lead and copper in tap water.

(1) Sample site location.

(a) By the applicable date for commencement of monitoring under subdivision B 6 a (4) (a), each waterworks owner shall complete a materials evaluation of the distribution system in order to identify a pool of targeted sampling sites that meets the requirements of this section, and which is sufficiently large to ensure that the owner can collect the number of lead and copper tap samples required in subdivision B 6 a (3). All sites from which first draw samples are collected shall be selected from this pool of targeted sampling sites. Sampling sites may not include faucets that have point-of-use or point-of-entry treatment devices designed to remove inorganic contaminants.

(b) A waterworks owner shall use the information on lead, copper, and galvanized steel that the owner is required to collect when conducting a materials evaluation (reference Appendix B Corrosion). When this

evaluation is insufficient to locate the requisite number of lead and copper sampling sites that meet the targeting criteria of this section, the owner shall review the sources of information listed below in order to identify a sufficient number of sampling sites. In addition, the owner shall seek to collect such information where possible in the course of its normal operations (e.g., checking service line materials when reading water meters or performing maintenance activities):

(i) All plumbing codes, permits, and records in the files of the building department(s) which indicate the plumbing materials that are installed within publicly and privately owned structures connected to the distribution system;

(ii) All inspections and records of the distribution system that indicate the material composition of the service connections that connect a structure to the distribution system; and

(iii) All existing water quality information, which includes the results of all prior analyses of the waterworks or individual structures connected to the waterworks, indicating locations that may be particularly susceptible to high lead or copper concentrations.

(c) The sampling sites selected for a community waterworks' sampling pool ("tier 1 sampling sites") shall consist of single family structures that:

(i) Contain copper pipes with lead solder installed between January 1983 and April 1986 or contain lead pipes; and/or

(ii) Are served by a lead service line.

NOTE: When multiple-family residences comprise at least 20% of the structures served by a waterworks, the waterworks may include these types of structures in its sampling pool.

(d) The owner of any community waterworks with insufficient tier 1 sampling sites shall complete the sampling pool with "tier 2 sampling sites," consisting of buildings, including multiple-family residences that:

(i) Contain copper pipes with lead solder installed between January 1983 and April 1986 or contain lead pipes; and/or

(ii) Are served by a lead service line.

(e) The owner of any community waterworks with insufficient tier 1 and tier 2 sampling sites shall complete the sampling pool with "tier 3 sampling sites," consisting of single family structures that contain copper pipes with lead solder installed before 1983. The owner of a community waterworks with insufficient tier 1, tier 2, and tier 3 sampling sites shall complete the sampling pool with representative

sites throughout the distribution system. For the purpose of this paragraph, a representative site is a site in which the plumbing materials used at that site would be commonly found at other sites served by the waterworks.

(f) The sampling sites selected for a nontransient noncommunity waterworks ("tier 1 sampling sites") shall consist of buildings that:

(i) Contain copper pipes with lead solder installed between January 1983 and April 1986 or contain lead pipes; and/or

(ii) Are served by a lead service line.

(g) The owner of a nontransient noncommunity waterworks with insufficient tier 1 sites that meet the targeting criteria in subdivision B 6 a (1) (f) of this section shall complete the sampling pool with sampling sites that contain copper pipes with lead solder installed before 1983. If additional sites are needed to complete the sampling pool, the owner of a nontransient noncommunity waterworks shall use representative sites throughout the distribution system. For the purpose of this paragraph, a representative site is a site in which the plumbing materials used at that site would be commonly found at other sites served by the waterworks.

(h) The owner of any waterworks whose distribution system contains lead service lines shall draw 50% of the samples the owner collects during each monitoring period from sites that contain lead pipes, or copper pipes with lead solder, and 50% of the samples the owner collects from sites served by a lead service line. Any owner who cannot identify a sufficient number of sampling sites served by a lead service line shall collect first draw tap samples from all of the sites identified as being served by such lines.

(2) Sample collection methods.

(a) All tap samples for lead and copper, with the exception of lead service line samples collected under 12 VAC 5-590-420 E 3 and samples collected under subdivision B 6 a (2) (e) of this section, shall be first draw samples.

(b) Each first-draw tap sample for lead and copper shall be one liter in volume and have stood motionless in the plumbing system of each sampling site for at least six hours. First draw samples from residential housing shall be collected from the cold-water kitchen tap or bathroom sink tap. First-draw samples from a nonresidential building shall be one liter in volume and shall be collected at an interior tap from which water is typically drawn for consumption. Non-first-draw samples collected in lieu of first-draw samples pursuant to subdivision B 6 a (2) (e) of this section shall be one liter in volume and shall be collected at an interior

tap from which water is typically drawn for consumption. First draw samples may be collected by the waterworks owner or the owner may allow residents to collect first draw samples after instructing the residents of the sampling procedures specified in this paragraph. To avoid problems of residents handling nitric acid, acidification of first draw samples may be done up to 14 days after the sample is collected. After acidification to resolubilize the metals, the sample must stand in the original container for the time specified in the approved EPA method before the sample can be analyzed. If an owner allows residents to perform sampling, the owner may not challenge, based on alleged errors in sample collection, the accuracy of sampling results.

(c) Each lead service line sample collected pursuant to 12 VAC 5-590-420 E 3 for the purpose of avoiding replacement shall be one liter in volume and have stood motionless in the lead service line for at least six hours. Lead service line samples shall be collected in one of the following three ways:

(i) At the tap after flushing the volume of water between the tap and the lead service line. The volume of water shall be calculated based on the interior diameter and length of the pipe between the tap and the lead service line;

(ii) Tapping directly into the lead service line; or

(iii) If the sampling site is a building constructed as a single-family residence, allowing the water to run until there is a significant change in temperature which would be indicative of water that has been standing in the lead service line.

(d) A waterworks owner shall collect each first draw tap sample from the same sampling site from which the owner collected a previous sample. If, for any reason, the owner cannot gain entry to a sampling site in order to collect a follow-up tap sample, the owner may collect the follow-up tap sample from another sampling site in the sampling pool as long as the new site meets the same targeting criteria, and is within reasonable proximity of the original site.

(e) The owner of a nontransient noncommunity waterworks, or a community waterworks that meets the criteria of 12 VAC 5-590-420 F 3 g (1) and (2) that does not have enough taps that can supply first-draw samples, as defined in subdivision B 6 a (2) (b) of this section, may apply to the district engineer in writing to substitute non-first-draw samples. If approved by the commissioner, such owners must collect as many first-draw samples from appropriate taps as possible and identify sampling times and locations that would likely result in the longest standing time for the remaining sites.

(3) Number of samples. Waterworks owners shall collect at least one sample during each monitoring period specified in subdivision B 6 a (4) of this section from the number of sites listed in the first column ("standard monitoring") of the table in this paragraph. The owner of a waterworks conducting reduced monitoring under subdivision B 6 a (4) (d) of this section shall collect at least one sample from the number of sites specified in the second column ("reduced monitoring") of the table in this paragraph during each monitoring period specified in subdivision B 6 a (4) (d) of this section. Such reduced monitoring sites shall be representative of the sites required for standard monitoring. The commissioner may specify sampling locations when a waterworks owner is conducting reduced monitoring. The table is as follows:

System Size (Number of People Served)	Number of sites (Standard Monitoring)	Number of sites (Reduced Monitoring)
>100,000	100	50
10,001-100,000	60	30
3,301 to 10,000	40	20
501 to 3,300	20	10
101 to 500	10	5
≤100	5	5

(4) Timing of monitoring.

(a) Initial tap sampling. The first six-month monitoring period for small (serving ≤3,300 population), medium-size (serving 3,301 to 50,000 population) and large waterworks (serving ≥50,000 population) shall be established by the commissioner.

(i) All large waterworks shall monitor during two consecutive six-month periods.

(ii) All small and medium-size waterworks shall monitor during each six-month monitoring period until: the waterworks exceeds the lead or copper action level and is therefore required to implement the corrosion control treatment requirements under 12 VAC 5-590-420 C, in which case the owner shall continue monitoring in accordance with subdivision B 6 a (4) (b) of this section, or the waterworks meets the lead and copper action levels during two consecutive six-month monitoring periods, in which case the owner may reduce monitoring in accordance with subdivision B 6 a (4) (d) of this section.

(b) Monitoring after installation of corrosion control and water supply

(source water) treatment.

(i) The owner of any large waterworks which installs optimal corrosion control treatment pursuant to 12 VAC 5-590-420 C 2 d (4) shall monitor during two consecutive six-month monitoring periods by the date specified in 12 VAC 5-590-420 C 2 d (5).

(ii) The owner of any small or medium-size waterworks which installs optimal corrosion control treatment pursuant to 12 VAC 5-590-420 C 2 e (5) shall monitor during two consecutive six-month monitoring periods by the date specified in 12 VAC 5-590-420 C 2 e (6).

(iii) The owner of any waterworks which installs source water treatment pursuant to 12 VAC 5-590-420 D 1 c shall monitor during two consecutive six-month monitoring periods by the date specified in 12 VAC 5-590-420 D 1 d.

(c) Monitoring after the commissioner specifies water quality parameter values for optimal corrosion control. After the commissioner specifies the values for water quality control parameters under 12 VAC 5-590-420 C 1 f, the waterworks owner shall monitor during each subsequent six-month monitoring period, with the first monitoring period to begin on the date the commissioner specifies the optimal values under 12 VAC 5-590-420 C 1 f.

(d) Reduced monitoring.

(i) The owner of a small or medium-size waterworks that meets the lead and copper action levels during each of two consecutive six-month monitoring periods may reduce the number of samples in accordance with subdivision B 6 a (3) of this section, and reduce the frequency of sampling to once per year.

(ii) The owner of any waterworks that maintains the range of values for the water quality control parameters reflecting optimal corrosion control treatment specified by the commissioner under 12 VAC 5-590-420 C 1 f during each of two consecutive six-month monitoring periods may reduce the frequency of monitoring to once per year and to reduce the number of lead and copper samples in accordance with subdivision B 6 a (3) of this section if the owner receives written approval from the commissioner. The commissioner shall review monitoring, treatment, and other relevant information submitted by the waterworks owner in accordance with 12 VAC 5-590-530 D, and shall notify the waterworks owner in writing when a determination is made that the owner is eligible to commence reduced monitoring pursuant to this paragraph. The commissioner shall review, and where appropriate,

revise its determination when the owner submits new monitoring or treatment data, or when other data relevant to the number and frequency of tap sampling becomes available.

(iii) The owner of a small or medium-size waterworks that meets the lead and copper action levels during three consecutive years of monitoring may reduce the frequency of monitoring for lead and copper from annually to once every three years. Any waterworks that maintains the range of values for the water quality control parameters reflecting optimal corrosion control treatment specified by the commissioner under 12 VAC 5-590-420 C 1 f during three consecutive years of monitoring may reduce the frequency of monitoring from annually to once every three years if the owner receives written approval from the commissioner. The commissioner shall review monitoring, treatment, and other relevant information submitted by the owner in accordance with 12 VAC 5-590-530 D and shall notify the waterworks owner in writing when a determination is made that the owner is eligible to commence reduced monitoring pursuant to this paragraph. The commissioner shall review, and where appropriate, revise its determination when the owner submits new monitoring or treatment data, or when other data relevant to the number and frequency of tap sampling becomes available.

(iv) The owner of a waterworks that reduces the number and frequency of sampling shall collect these samples from representative sites included in the pool of targeted sampling sites identified in subdivision B 6 a (1) of this section. Waterworks owners sampling annually or less frequently shall conduct the lead and copper tap sampling during the months of June, July, August or September. For a nontransient noncommunity waterworks that does not operate during the months of June through September, the commissioner shall designate an alternate monitoring period that represents a time of normal operation for the waterworks.

(v) The owner of any waterworks that demonstrates for two consecutive six-month monitoring periods that the tap water lead level computed under 12 VAC 5-590-410 E 3 is less than or equal to 0.005 mg/L and the tap water copper level computed under 12 VAC 5-590-410 E 3 is less than or equal to 0.65 mg/L may reduce the number of samples in accordance with subdivision B 6 a (3) of this section and reduce the frequency of sampling to once every three calendar years.

(vi) The owner of a small or medium-size waterworks subject to reduced monitoring that exceeds the lead or copper action level

shall resume sampling in accordance with subdivision B 6 a (4) (c) of this section and collect the number of samples specified for standard monitoring under subdivision B 6 a (3) of this section. Such waterworks owner shall also conduct water quality parameter monitoring in accordance with subdivision B 6 b (2), (3), or (4) of this section (as appropriate) during the monitoring period in which the action level is exceeded. The owner of any such waterworks may resume annual monitoring for lead and copper at the tap at the reduced number of sites specified in subdivision B 6 a (3) of this section after it has completed two subsequent consecutive six-month rounds of monitoring that meet the criteria of subdivision B 6 a (4) (d) (i) of this section and/or may resume triennial monitoring for lead and copper at the reduced number of sites after it demonstrates through subsequent rounds of monitoring that it meets the criteria of either subdivision B 6 a (4) (d) (iii) or (v) of this section.

(vii) The owner of any waterworks subject to the reduced monitoring frequency that fails to operate at or above the minimum value or within the range of values for the water quality parameters specified by the commissioner under 12 VAC 5-590-420 C 1 f for more than nine days in any six-month period specified in subdivision B 6 b (4) of this section shall conduct tap water sampling for lead and copper at the frequency specified in subdivision B 6 a (4) (c) of this section, collect the number of samples specified for standard monitoring under subdivision B 6 a (3) of this section, and shall resume monitoring for water quality parameters within the distribution system in accordance with subdivision B 6 b (4) of this section. The owner of such a waterworks may resume reduced monitoring for lead and copper at the tap and for water quality parameters within the distribution system under the following conditions:

((a)) The waterworks owner may resume annual monitoring for lead and copper at the tap at the reduced number of sites specified in subdivision B 6 a (3) of this section after completion of two subsequent six-month rounds of monitoring that meet the criteria of subdivision B 6 a (4) (d) (ii) of this section and the owner has received written approval from the commissioner that it is appropriate to resume reduced monitoring on an annual frequency.

((b)) The waterworks owner may resume triennial monitoring for lead and copper at the tap at the reduced number of sites after demonstration through subsequent rounds of monitoring that it meets the criteria of either subdivision B 6 a (4) (d) (iii) or (v) of this section and the owner has received written approval from the commissioner that it is appropriate to resume triennial monitoring.

((c)) The waterworks owner may reduce the number of water quality parameter tap water samples required in accordance with subdivision B 6 b (5) (a) of this section and the frequency with which it collects such samples in accordance with subdivision B 6 b (5) (b) of this section. The owner of such a waterworks may not resume triennial monitoring for water quality parameters at the tap until it demonstrates, in accordance with the requirements of subdivision B 6 b (5) (b) of this section, that it has requalified for triennial monitoring.

(viii) The owner of any waterworks subject to a reduced monitoring frequency under subdivision B 6 a (4) (d) of this section that either adds a new source of water or changes any water treatment shall inform the district engineer in writing in accordance with 12 VAC 5-590-530 D 1 c. The commissioner may require the waterworks owner to resume sampling in accordance with subdivision B 6 a (4) (c) of this section and collect the number of samples specified for standard monitoring under subdivision B 6 a (3) of this section or take other appropriate steps such as increased water quality parameter monitoring or re-evaluation of its corrosion control treatment given the potentially different water quality considerations.

(5) Additional monitoring by waterworks owner. The results of any monitoring conducted in addition to the minimum requirements of this section shall be considered by the waterworks owner and the commissioner in making any determinations (i.e., calculating the 90th percentile lead or copper level) under this subpart.

(6) Invalidation of lead or copper tap water samples. A sample invalidated under this paragraph does not count toward determining lead or copper 90th percentile levels under 12 VAC 5-590-410 E or toward meeting the minimum monitoring requirements of subdivision B 6 a (3) of this section.

(a) The commissioner may invalidate a lead or copper tap water sample if at least one of the following conditions is met.

(i) The laboratory establishes that improper sample analysis caused erroneous results.

(ii) The commissioner determines that the sample was taken from a site that did not meet the site selection criteria of this section.

(iii) The sample container was damaged in transit.

(iv) There is substantial reason to believe that the sample was subject to tampering.

(b) The waterworks owner must report the results of all samples to the district engineer and all supporting documentation for samples the

owner believes should be invalidated.

(c) To invalidate a sample under subdivision B 6 a (6) (a) of this section, the decision and the rationale for the decision must be documented in writing. The commissioner may not invalidate a sample solely on the grounds that a follow-up sample result is higher or lower than that of the original sample.

(d) The waterworks owner must collect replacement samples for any samples invalidated under this section if, after the invalidation of one or more samples, the owner has too few samples to meet the minimum requirements of subdivision B 6 a (3) of this section. Any such replacement samples must be taken as soon as possible, but no later than 20 days after the date the commissioner invalidates the sample or by the end of the applicable monitoring period, whichever occurs later. Replacement samples taken after the end of the applicable monitoring period shall not also be used to meet the monitoring requirements of a subsequent monitoring period. The replacement samples shall be taken at the same locations as the invalidated samples or, if that is not possible, at locations other than those already used for sampling during the monitoring period.

(7) Monitoring waivers for small systems. The owner of any small waterworks that meets the criteria of this section may apply to the commissioner to reduce the frequency of monitoring for lead and copper to once every nine years (i.e., a "full waiver") if the owner meets all of the materials criteria specified in subdivision B 6 a (7) (a) of this section and all of the monitoring criteria specified in subdivision B 6 a (7) (b) of this section. The owner of any small system that meets the criteria in subdivisions B 6 a (7) (a) and (b) of this section only for lead, or only for copper, may apply to the commissioner for a waiver to reduce the frequency of tap water monitoring to once every nine years for that contaminant only (i.e., a "partial waiver").

(a) Materials criteria. The waterworks owner must demonstrate that the distribution system and service lines and all drinking water supply plumbing, including plumbing conveying drinking water within all residences and buildings connected to the waterworks, are free of lead-containing materials and/or copper-containing materials, as those terms are defined in this paragraph, as follows:

(i) Lead. To qualify for a full waiver, or a waiver of the tap water monitoring requirements for lead (i.e., a "lead waiver"), the waterworks owner must provide certification and supporting documentation to the commissioner that the waterworks is free of all lead-containing materials, as follows:

((a)) It contains no plastic pipes that contain lead plasticizers, or plastic service lines that contain lead plasticizers; and

((b)) It is free of lead service lines, lead pipes, lead soldered pipe joints, and leaded brass or bronze alloy fittings and fixtures, unless such fittings and fixtures meet the specifications of any standard established pursuant to 42 USC § 300g-6(e) (SDWA § 1417(e)).

(ii) Copper. To qualify for a full waiver, or a waiver of the tap water monitoring requirements for copper (i.e., a "copper waiver"), the waterworks owner must provide certification and supporting documentation to the commissioner that the waterworks contains no copper pipes or copper service lines.

(b) Monitoring criteria for waiver issuance. The waterworks owner must have completed at least one six-month round of standard tap water monitoring for lead and copper at sites approved by the commissioner and from the number of sites required by subdivision B 6 a (3) of this section and demonstrate that the 90th percentile levels for any and all rounds of monitoring conducted since the owner became free of all lead-containing and/or copper-containing materials, as appropriate, meet the following criteria.

(i) Lead levels. To qualify for a full waiver, or a lead waiver, the waterworks owner must demonstrate that the 90th percentile lead level does not exceed 0.005 mg/L.

(ii) Copper levels. To qualify for a full waiver, or a copper waiver, the waterworks owner must demonstrate that the 90th percentile copper level does not exceed 0.65 mg/L.

(c) Commissioner approval of waiver application. The commissioner shall notify the waterworks owner of its waiver determination, in writing, setting forth the basis of its decision and any condition of the waiver. As a condition of the waiver, the commissioner may require the owner to perform specific activities (e.g., limited monitoring, periodic outreach to customers to remind them to avoid installation of materials that might void the waiver) to avoid the risk of lead or copper concentration of concern in tap water. The owner of a small waterworks must continue monitoring for lead and copper at the tap as required by subdivisions B 6 a (4) (a) through (d) of this section, as appropriate, until it receives written notification from the commissioner that the waiver has been approved.

(d) Monitoring frequency for waterworks owners with waivers.

(i) A waterworks owner with a full waiver must conduct tap water monitoring for lead and copper in accordance with subdivision B 6 a (4) (d) (iv) of this section at the reduced number of sampling sites

identified in subdivision B 6 a (3) of this section at least once every nine years and provide the materials certification specified in subdivision B 6 a (7) (a) of this section for both lead and copper to the commissioner along with the monitoring results.

(ii) A waterworks owner with a partial waiver must conduct tap water monitoring for the waived contaminant in accordance with subdivision B 6 a (4) (d) (iv) of this section at the reduced number of sampling sites specified in subdivision B 6 a (3) of this section at least once every nine years and provide the materials certification specified in subdivision B 6 a (7) (a) of this section pertaining to the waived contaminant along with the monitoring results. Such a waterworks owner also must continue to monitor for the nonwaived contaminant in accordance with requirements of subdivisions B 6 a (4) (a) through (d) of this section, as appropriate.

(iii) If a waterworks owner with a full or partial waiver adds a new source of water or changes any water treatment, the owner must notify the commissioner in writing in accordance with 12 VAC 5-590-530 D 1 c. The commissioner has the authority to require the owner to add or modify waiver conditions (e.g., require recertification that the waterworks is free of lead-containing and/or copper-containing materials, require additional round(s) of monitoring), if it deems such modifications are necessary to address treatment or source water changes at the waterworks.

(iv) If a waterworks owner with a full or partial waiver becomes aware that it is no longer free of lead-containing or copper-containing materials, as appropriate, (e.g., as a result of new construction or repairs), the owner shall notify the commissioner in writing no later than 60 days after becoming aware of such a change.

(e) Continued eligibility. If the waterworks owner continues to satisfy the requirements of subdivision B 6 a (7) (d) of this section, the waiver will be renewed automatically, unless any of the conditions listed in subdivisions (i), (ii), or (iii) of this subdivision (e) occurs. A waterworks owner whose waiver has been revoked may reapply for a waiver at such time as it again meets the appropriate materials and monitoring criteria of subdivisions B 6 a (7) (a) and (b) of this section.

(i) A waterworks owner with a full waiver or a lead waiver no longer satisfies the materials criteria of subdivision B 6 a (7) (a) (i) of this section or has a 90th percentile lead level greater than 0.005 mg/L.

(ii) A waterworks owner with a full waiver or a copper waiver no longer satisfies the materials criteria of subdivision B 6 a (7) (a) (ii)

of this section or has a 90th percentile copper level greater than 0.65 mg/L.

(iii) The commissioner notifies the waterworks owner, in writing, that the waiver has been revoked, setting forth the basis of the decision.

(f) Requirements following waiver revocation. A waterworks owner whose full or partial waiver has been revoked by the commissioner is subject to the corrosion control treatment and lead and copper tap water monitoring requirements, as follows:

(i) If the waterworks owner exceeds the lead and/or copper action level, the owner must implement corrosion control treatment in accordance with the deadlines specified in 12 VAC 5-590-420 C 2 e and any other applicable requirements of this subpart.

(ii) If the waterworks owner meets both the lead and the copper action level, the owner must monitor for lead and copper at the tap no less frequently than once every three years using the reduced number of sample sites specified in subdivision B 6 a (3) of this section.

(g) Pre-existing waivers. Waivers for small waterworks approved by the commissioner in writing prior to April 11, 2000, shall remain in effect under the following conditions:

(i) If the waterworks owner has demonstrated that it is both free of lead-containing and copper-containing materials, as required by subdivision B 6 a (7) (a) of this section and that its 90th percentile lead levels and 90th percentile copper levels meet the criteria of subdivision B 6 a (7) (b) of this section, the waiver remains in effect so long as the owner continues to meet the waiver eligibility criteria of subdivision B 6 a (7) (e) of this section. The first round of tap water monitoring conducted pursuant to subdivision B 6 a (7) (d) of this section shall be completed no later than nine years after the last time the owner has monitored for lead and copper at the tap.

(ii) If the waterworks owner has met the materials criteria of subdivision B 6 a (7) (a) of this section but has not met the monitoring criteria of subdivision B 6 a (7) (b) of this section, the owner shall conduct a round of monitoring for lead and copper at the tap demonstrating that it meets the criteria of subdivision B 6 a (7) (b) of this section no later than September 30, 2000. Thereafter, the waiver shall remain in effect as long as the owner meets the continued eligibility criteria of subdivision B 6 a (7) (e) of this section. The first round of tap water monitoring conducted pursuant to subdivision B 6 a (7) (d) of this section shall be completed no later than nine years after the round of monitoring conducted

pursuant to subdivision B 6 a (7) (b) of this section.

b. Monitoring requirements for water quality parameters. The owners of all large waterworks, and all small and medium-size waterworks that exceed the lead or copper action level shall monitor water quality parameters in addition to lead and copper in accordance with this section. The requirements of this section are summarized in Appendix M.

(1) General requirements.

(a) Sample collection methods.

(i) Tap samples shall be representative of water quality throughout the distribution system taking into account the number of persons served, the different sources of water, the different treatment methods employed by the waterworks, and seasonal variability. Tap sampling under this section is not required to be conducted at taps targeted for lead and copper sampling under subdivision B 6 (a) (1) of this section. Waterworks owners may find it convenient to conduct tap sampling for water quality parameters at sites approved for coliform sampling.

(ii) Samples collected at the entry point(s) to the distribution system shall be from locations representative of each source after treatment. If a waterworks draws water from more than one source and the sources are combined before distribution, the waterworks owner must sample at an entry point to the distribution system during periods of normal operating conditions (i.e., when water is representative of all sources being used).

(b) Number of samples.

(i) Waterworks owners shall collect two tap samples for applicable water quality parameters during each monitoring period specified under subdivision B 6 b (2) through (5) of this section from the following number of sites.

System Size (Number of People Served)	Number of Sites for Water Quality Parameters
>100,000	25
10,001-100,000	10
3,301 to 10,000	3
501 to 3,300	2
101 to 500	1
≤100	1

(ii) Except as provided in subdivision B 6 b (3) (c) of this section,

waterworks owners shall collect two samples for each applicable water quality parameter at each entry point to the distribution system during each monitoring period specified in subdivision B 6 b (2) of this section. During each monitoring period specified in subdivision B 6 b (3) through (5) of this section, waterworks owners shall collect one sample for each applicable water quality parameter at each entry point to the distribution system.

(2) Initial sampling. The owners of all large waterworks shall measure the applicable water quality parameters as specified below at taps and at each entry point to the distribution system during each six-month monitoring period specified in subdivision B 6 a (4) (a) of this section. The owners of all small and medium-size waterworks shall measure the applicable water quality parameters at the locations specified below during each six-month monitoring period specified in subdivision B 6 a (4) (a) of this section during which the waterworks exceeds the lead or copper action level.

(a) At taps:

(i) pH;

(ii) alkalinity;

(iii) orthophosphate, when an inhibitor containing a phosphate compound is used;

(iv) silica, when an inhibitor containing a silicate compound is used;

(v) calcium;

(vi) conductivity; and

(vii) water temperature.

(b) At each entry point to the distribution system: all of the applicable parameters listed in subdivision B 6 b (2) (a) of this section.

(3) Monitoring after installation of corrosion control. The owner of any large waterworks which installs optimal corrosion control treatment pursuant to 12 VAC 5-590-420 C 2 d (4) shall measure the water quality parameters at the locations and frequencies specified below during each six-month monitoring period specified in subdivision B 6 a (4) (b) (i) of this section. The owner of any small or medium-size waterworks which installs optimal corrosion control treatment shall conduct such monitoring during each six-month monitoring period specified in subdivision B 6 a (4) (b) (ii) in which the waterworks exceeds the lead or copper action level.

(a) At taps, two samples for:

(i) pH;

(ii) alkalinity;

(iii) orthophosphate, when an inhibitor containing a phosphate compound is used;

(iv) silica, when an inhibitor containing a silicate compound is used;

(v) calcium, when calcium carbonate stabilization is used as part of corrosion control.

(b) Except as provided in subdivision B 6 b (3) (c) of this section, at each entry point to the distribution system, at least one sample no less frequently than every two weeks (bi-weekly) for:

(i) pH;

(ii) when alkalinity is adjusted as part of optimal corrosion control, a reading of the dosage rate of the chemical used to adjust alkalinity, and the alkalinity concentration; and

(iii) when a corrosion inhibitor is used as part of optimal corrosion control, a reading of the dosage rate of the inhibitor used, and the concentration of orthophosphate or silica (whichever is applicable).

(c) The owner of any ground water waterworks can limit entry point sampling described in subdivision B 6 b (3) (b) of this section to those entry points that are representative of water quality and treatment conditions throughout the waterworks. If water from untreated ground water sources mixes with water from treated ground water sources, the owner must monitor for water quality parameters both at representative entry points receiving treatment and representative entry points receiving no treatment. Prior to the start of any monitoring under this paragraph, the owner shall provide to the commissioner written information identifying the selected entry points and documentation, including information on seasonal variability, sufficient to demonstrate that the sites are representative of water quality and treatment conditions throughout the waterworks.

(4) Monitoring after the commissioner specifies water quality parameter values for optimal corrosion control. After the commissioner specifies the values for applicable water quality control parameters reflecting optimal corrosion control treatment under 12 VAC 5-590-420 C 1 f, the owners of all large waterworks shall measure the applicable water quality parameters in accordance with subdivision B 6 b (3) of this section and determine compliance with the requirements of 12 VAC 5-590-420 C 1 g every six months with the first six-month period to begin on the date the commissioner specifies the optimal values under 12 VAC 5-590-420 C 1 f. The owner of any small or medium-size waterworks shall conduct such monitoring during each six-month monitoring period specified in this subdivision in which the waterworks exceeds the lead or copper action level. For the owner of any such small and medium-size waterworks that is

subject to a reduced monitoring frequency pursuant to subdivision B 6 a (4) (d) of this section at the time of the action level exceedance, the end of the applicable six-month period under this paragraph shall coincide with the end of the applicable monitoring period under subdivision B 6 a (4) (d) of this section. Compliance with the commissioner-designated optimal water quality parameter values shall be determined as specified under 12 VAC 5-590-420 C 1 g.

(5) Reduced monitoring.

(a) The owner of any waterworks that maintains the range of values for the water quality parameters reflecting optimal corrosion control treatment during each of two consecutive six-month monitoring periods under subdivision B 6 b (4) of this section shall continue monitoring at the entry point(s) to the distribution system as specified in subdivision B 6 b (3) (b) of this section. The owner of such waterworks may collect two tap samples for applicable water quality parameters from the following reduced number of sites during each six-month monitoring period.

Size of Water System (Number of People Served)	Reduced Number of WQP Monitoring Sites
>100,000	10
10,001 to 100,000	7
3,301 to 10,000	3
501 to 3,300	2
101 to 500	1
≤100	1

(b) The owner of any waterworks that maintains the range of values for the water quality parameters reflecting optimal corrosion control treatment specified by the commissioner under 12 VAC 5-590-420 C 1f during three consecutive years of monitoring may reduce the frequency with which the owner collects the number of tap samples for applicable water quality parameters specified in subdivision B 6 b (5) (a) of this section from every six months to annually. The owner of any waterworks that maintains the range of values for the water quality parameters reflecting optimal corrosion control treatment specified by the commissioner under 12 VAC 5-590-420 C 1 f during three consecutive years of annual monitoring under this paragraph may reduce the frequency with which it collects the number of tap samples for applicable water quality parameters specified in subdivision B 6 a (5) (a) of this section from annually to every three years.

(c) The owner of a waterworks may reduce the frequency with which

tap samples are collected for applicable water quality parameters specified in subdivision B 6 b (5) (a) of this section to every three years if the owner demonstrates during two consecutive monitoring periods that the tap water lead level at the 90th percentile is less than or equal to the PQL for lead (0.005 mg/L), that the tap water copper level at the 90th percentile is less than or equal to 0.65 mg/L for copper, and that the owner also has maintained the range of values for water quality parameters reflecting optimal corrosion control treatment specified by the commissioner under 12 VAC 5-590-420 C 1 f.

(d) The owner of a waterworks that conducts sampling annually shall collect these samples evenly throughout the year so as to reflect seasonal variability.

(e) The owner of any waterworks subject to the reduced monitoring frequency that fails to operate at or above the minimum value or within the range of values for the water quality parameters specified by the commissioner under 12 VAC 5-590-420 C 1 f for more than nine days in any six-month period specified in 12 VAC 5-590-420 C 1 g shall resume distribution system tap water sampling in accordance with the number and frequency requirements in subdivision B 6 b (4) of this section. Such a waterworks owner may resume annual monitoring for water quality parameters at the tap at the reduced number of sites specified in subdivision B 6 b (5) of this section after completion of two subsequent consecutive six-month rounds of monitoring that meet the criteria of that subdivision and/or may resume triennial monitoring for water quality parameters at the tap at the reduced number of sites after demonstration through subsequent rounds of monitoring that the criteria of either subdivision B 6 b (5) (b) or (c) of this section has been met.

(6) Additional monitoring by waterworks owners. The results of any monitoring conducted in addition to the minimum requirements of this section shall be considered by the waterworks owner and the commissioner in making any determinations under this section or 12 VAC 5-590-420 C 1.

c. Monitoring requirements for lead and copper in water supplies (source water).

(1) Sample location, collection methods, and number of samples.

(a) The owner of a waterworks that fails to meet the lead or copper action level on the basis of tap samples collected in accordance with subdivision B 6 a of this section shall collect lead and copper water supply samples in accordance with the following requirements regarding sample location, number of samples, and collection

methods:

(i) The owner of a waterworks served by groundwater sources shall take a minimum of one sample at every entry point to the distribution system which is representative of each well after treatment (hereafter called a sampling point). The waterworks owner shall take one sample at the same sampling point unless conditions make another sampling point more representative of each source or treatment plant.

(ii) The owner of a waterworks served by surface water sources shall take a minimum of one sample at every entry point to the distribution system after any application of treatment or in the distribution system at a point which is representative of each source after treatment (hereafter called a sampling point). The waterworks owner shall take each sample at the same sampling point unless conditions make another sampling point more representative of each source or treatment plant. Note that for the purpose of this paragraph, a waterworks served by a surface water source includes waterworks served by a combination of surface and ground sources.

(iii) If a waterworks draws water from more than one source and the sources are combined before distribution, the waterworks owner must collect samples at an entry point to the distribution system during periods of normal operating conditions (i.e., when water is representative of all sources being used).

(iv) The commissioner may reduce the total number of samples that must be analyzed by allowing the use of compositing. Compositing of samples must be done by certified laboratory personnel. Composite samples from a maximum of five samples are allowed, provided that if the lead concentration in the composite sample is greater than or equal to 0.001 mg/L or the copper concentration is greater than or equal to 0.160 mg/L, then either a follow-up sample shall be collected and analyzed within 14 days at each sampling point included in the composite or if duplicates of or sufficient quantities from the original samples from each sampling point used in the composite are available, the waterworks owner may use these instead of resampling.

(b) Where the results of sampling indicate an exceedance of maximum permissible water supply levels established under 12 VAC 5-590-420 D 4, the commissioner may require that one additional sample be collected as soon as possible after the initial sample was taken (but not to exceed two weeks) at the same sampling point. If a commissioner required confirmation sample is taken for lead or copper, then the

results of the initial and confirmation sample shall be averaged in determining compliance with the commissioner-specified maximum permissible levels. Any sample value below the detection limit shall be considered to be zero. Any value above the detection limit but below the PQL shall either be considered as the measured value or be considered one-half the PQL. The PQL for Lead is equal to 0.005 mg/l and the PQL for Copper is equal to 0.050 mg/l.

(2) Monitoring frequency after waterworks exceeds tap action level. The owner of any waterworks which exceeds the lead or copper action level at the tap shall collect one water supply sample from each entry point to the distribution system within six months after the exceedance.

(3) Monitoring frequency after installation of water supply treatment. The owner of any waterworks which installs water supply treatment pursuant to 12 VAC 5-590-420 D 1 c shall collect an additional water supply sample from each entry point to the distribution system during two consecutive six-month monitoring periods by the deadline specified in 12 VAC 5-590-420 D 1 d.

(4) Monitoring frequency after the commissioner specifies maximum permissible water supply lead and copper levels or determines that water supply treatment is not needed.

(a) A waterworks owner shall monitor at the frequency specified below in cases where the commissioner specifies maximum permissible water supply lead and copper levels under 12 VAC 5-590-420 D 4 or determines that the owner is not required to install water supply treatment under 12 VAC 5-590-420 D 2 (b).

(i) The owner of a waterworks using only groundwater shall collect samples once during the three-year compliance period in effect when the applicable commissioner determination under subdivision B 6 c (4) (a) of this section is made. Owners of such waterworks shall collect samples once during each subsequent compliance period.

(ii) The owner of a waterworks using surface water (or a combination of surface and groundwater) shall collect samples once during each year, the first annual monitoring period to begin on the date on which the applicable commissioner determination is made under subdivision B 6 c (4) (a) of this section.

(b) A waterworks owner is not required to conduct water supply sampling for lead and/or copper if the waterworks meets the action level for the specific contaminant in tap water samples during the entire water supply sampling period applicable to the waterworks under subdivision B 6 c (4) (a) (i) or (ii) of this section.

(5) Reduced monitoring frequency.

(a) The owner of a waterworks using only groundwater may reduce the monitoring frequency for lead and copper in water supplies to once during each nine-year compliance cycle if the waterworks owner meets one of the following criteria:

(i) The waterworks owner demonstrates that finished drinking water entering the distribution system has been maintained below the maximum permissible lead and copper concentrations specified by the commissioner under 12 VAC 5-590-420 D 4 during at least three consecutive compliance periods under subdivision B 6 c (4) (a) of this section; or

(ii) The commissioner has determined that water supply treatment is not needed and the waterworks owner demonstrates that, during the last three consecutive compliance periods in which sampling was conducted under subdivision B 6 c (4) (a) of this section, the concentration of lead in the water supply was less than or equal to 0.005 mg/L and the concentration of copper in the water supply was less than or equal to 0.65 mg/L.

(b) The owner of a waterworks using surface water (or a combination of surface and ground waters) may reduce the monitoring frequency for lead and copper in water supplies to once during each nine-year compliance cycle if the waterworks owner meets one of the following criteria:

(i) The waterworks owner demonstrates that finished drinking water entering the distribution system has been maintained below the maximum permissible lead and copper concentrations specified by the commissioner under 12 VAC 5-590-420 D 4 for at least three consecutive years; or

(ii) The commissioner has determined that water supply treatment is not needed and the waterworks owner demonstrates that, during the last three consecutive years, the concentration of lead in the water supply was less than or equal to 0.005 mg/L and the concentration of copper in the water supply was less than or equal to 0.65 mg/L.

(c) A waterworks that uses a new water supply is not eligible for reduced monitoring for lead and/or copper until concentrations in samples collected from the new supply during three consecutive monitoring periods are below the maximum permissible lead and copper concentrations specified by the commissioner in 12 VAC 5-590-420 D 1 e.

7. Monitoring filtration and disinfection.

a. The owner of a waterworks that uses a surface water source or a groundwater source under the direct influence of surface water and provides filtration treatment must monitor in accordance with this section beginning June 29, 1993, or when filtration is installed, whichever is later.

b. Turbidity measurements as required by 12 VAC 5-590-410 F shall be performed on representative samples of the filtered water every four hours (or more frequently) that the waterworks serves water to the public. A waterworks owner may substitute continuous turbidity monitoring for grab sample monitoring if it validates the continuous measurement for accuracy on a regular basis using a protocol approved by the Office. For any waterworks using slow sand filtration or filtration treatment other than conventional treatment, direct filtration, or diatomaceous earth filtration, the office may reduce the sampling frequency to once per day if it determines that less frequent monitoring is sufficient to indicate effective filtration performance. For waterworks serving 500 or fewer persons, the office may reduce the turbidity sampling frequency to once per day, regardless of the type of filtration treatment used, if the office determines that less frequent monitoring is sufficient to indicate effective filtration performance.

(1) In addition to the above, as of January 1, 2001, waterworks serving at least 10,000 people and as of January 1, 2005, waterworks serving less than 10,000 people supplied by surface water or groundwater under the direct influence of surface water using conventional filtration treatment or direct filtration must conduct continuous monitoring of turbidity for each individual filter, using an approved method in 12 VAC 5-590-440. The turbidimeter must be calibrated using the procedure specified by the manufacturer. Waterworks must record the results of individual filter turbidity monitoring every 15 minutes.

(2) If there is a failure in the continuous turbidity monitoring equipment, the waterworks must conduct grab sampling every four hours in lieu of continuous monitoring but for no more than five working days (for waterworks serving at least 10,000 people) or 14 days (for waterworks serving less than 10,000 people) following the failure of the equipment.

(3) If a waterworks serving less than 10,000 people consists of two or fewer filters, continuous monitoring of the combined filter effluent may be used in lieu of individual filter monitoring.

c. The residual disinfectant concentration of the water entering the distribution system shall be monitored continuously, and the lowest value shall be recorded each day, except that if there is a failure in the continuous monitoring equipment, grab sampling every four hours may be conducted in lieu of continuous monitoring, but for no more than five working days following the failure of the equipment, and owners of waterworks serving 3,300 or fewer persons may take grab samples in lieu of continuous monitoring on an

ongoing basis at the frequencies each day prescribed below:

Waterworks size by population	Samples/Day[1]
500 or less	1
501 to 1,000	2
1,000 to 2,500	3
2,501 to 3,300	4

[1]The day's samples cannot be taken at the same time. The sampling intervals are subject to commissioner's review and approval.

If at any time the residual disinfectant concentration falls below 0.2 mg/L in a waterworks using grab sampling in lieu of continuous monitoring, the waterworks owner shall take a grab sample every four hours until the residual disinfectant concentration is equal to or greater than 0.2 mg/L.

(1) The residual disinfectant concentration must be measured at least at the same points in the distribution system and at the same time as total coliforms are sampled, as specified in subsection A of this section, except that the division may allow a waterworks owner which uses both a surface water source or a groundwater source under direct influence of surface water, and a groundwater source to take disinfectant residual samples at points other than the total coliform sampling points if the division determines that such points are more representative of treated (disinfected) water quality within the distribution system. Heterotrophic bacteria, measured as heterotrophic plate count (HPC) as specified in 12 VAC 5-590-420 B may be measured in lieu of residual disinfectant concentration.

(2) If the office determines, based on site-specific considerations, that a waterworks has no means for having a sample transported and analyzed for HPC by a certified laboratory under the requisite time and temperature conditions and that the waterworks is providing adequate disinfection in the distribution system, the requirements of subdivision B 7 (1) of this section do not apply to that waterworks.

d. The following information on the samples taken in the distribution system in conjunction with total coliform monitoring pursuant to 12 VAC 5-590-420 B shall be reported monthly to the division by the waterworks owner:

(1) Number of instances where the residual disinfectant concentration is measured;

(2) Number of instances where the residual disinfectant concentration is not measured but HPC is measured;

(3) Number of instances where the residual disinfectant concentration is measured but not detected and no HPC is measured;

(4) Number of instances where no residual disinfectant concentration is detected and where the HPC is greater than 500/mL;

(5) Number of instances where the residual disinfectant concentration is not measured and HPC is greater than 500/mL.

(6) For the current and previous month the waterworks serves water to the public, the value of "V" in percent in the following formula:

V = (c + d + e) / (a + b) X 100

where

a = the value in subdivision B 7 d (1) of this section,

b = the value in subdivision B 7 d (2) of this section,

c = the value in subdivision B 7 d (3) of this section,

d = the value in subdivision B 7 d (4) of this section,

e = the value in subdivision B 7 d (5) of this section,

(7) If the division determines, based on site-specific considerations, that a waterworks owner has no means for having a sample transported and analyzed for HPC by a certified laboratory within the requisite time and temperature conditions and that the waterworks is providing adequate disinfection in the distribution system, the requirements of subdivision B 7 c (1) of this section do not apply.

e. A waterworks owner need not report the data listed in 12 VAC 5-590-530 C 2 a if all data listed in 12 VAC 5-590-530 C 2 a through c remain on file at the waterworks and the division determines that the waterworks owner has submitted all the information required by 12 VAC 5-590-530 C 2 a through c for at least 12 months.

8. Operational. Waterworks owners may be required by the division to collect additional samples to provide quality control for any treatment processes that are employed.

C. Physical. All samples for turbidity analysis shall be taken at a representative entry point or points to the water distribution system unless otherwise specified. Turbidity samples shall be analyzed, at least once per day at all waterworks that use surface water sources or groundwater sources under the direct influence of surface water.

D. Radiological. The location of sampling points, the radionuclides measured in community waterworks, the frequency, and the timing of sampling within each compliance period shall be established or approved by the commissioner. The commissioner may increase required monitoring where necessary to detect variations within the waterworks. Failure to comply with the sampling schedules in this section will require public notification pursuant to 12 VAC 5-590-540.

Community waterworks owners shall conduct monitoring to determine compliance

with the PMCLs in Table 2.5 and 12 VAC 5-590-400 in accordance with this section.

1. Monitoring and compliance requirements for gross alpha particle activity, radium-226, radium-228, and uranium.

a. Community waterworks owners must conduct initial monitoring to determine compliance with 12 VAC 5-590-400 B 2, 12 VAC 5-590-400 B 3 and 12 VAC 5-590-400 B 4 by December 31, 2007. For the purposes of monitoring for gross alpha particle activity, radium-226, radium-228, uranium, and beta particle and photon radioactivity in drinking water, "detection limit" is defined as in Appendix B of this chapter.

(1) Applicability and sampling location for existing community waterworks or sources. The owners of all existing community waterworks using ground water, surface water or waterworks using both ground and surface water must sample at every entry point to the distribution system that is representative of all sources being used under normal operating conditions. The community waterworks owner must take each sample at the same entry point unless conditions make another sampling point more representative of each source.

(2) Applicability and sampling location for new community waterworks or sources. All new community waterworks or community waterworks that use a new source of water must begin to conduct initial monitoring for the new source within the first quarter after initiating use of the source. Community waterworks owners must conduct more frequent monitoring when directed by the commissioner in the event of possible contamination or when changes in the distribution system or treatment processes occur which may increase the concentration of radioactivity in finished water.

b. Initial monitoring: Community waterworks owners must conduct initial monitoring for gross alpha particle activity, radium-226, radium-228, and uranium as follows:

(1) Community waterworks without acceptable historical data, as defined below, must collect four consecutive quarterly samples at all entry points before December 31, 2007.

(2) Grandfathering of data: The commissioner may allow historical monitoring data collected at an entry point to satisfy the initial monitoring requirements for that entry point, for the following situations:

(a) To satisfy initial monitoring requirements, a community waterworks owner having only one entry point to the distribution system may use the monitoring data from the last compliance monitoring period that began between June 2000 and December 8, 2003.

(b) To satisfy initial monitoring requirements, a community waterworks owner with multiple entry points and having appropriate historical

monitoring data for each entry point to the distribution system may use the monitoring data from the last compliance monitoring period that began between June 2000 and December 8, 2003.

(3) For gross alpha particle activity, uranium, radium-226, and radium-228 monitoring, the commissioner may waive the final two quarters of initial monitoring for an entry point if the results of the samples from the previous two quarters are below the detection limit specified in Appendix B.

(4) If the average of the initial monitoring results for an entry point is above the PMCL, the community waterworks owner must collect and analyze quarterly samples at that entry point until the waterworks owner has results from four consecutive quarters that are at or below the PMCL, unless the community waterworks owner enters into another schedule as part of a formal compliance agreement with the commissioner.

c. Reduced monitoring: The commissioner may allow community waterworks owners to reduce the future frequency of monitoring from once every three years to once every six or nine years at each entry point, based on the following criteria:

(1) If the average of the initial monitoring results for each contaminant (i.e., gross alpha particle activity, uranium, radium-226, or radium-228) is below the detection limit specified in Appendix B, the waterworks owner must collect and analyze for that contaminant using at least one sample at that entry point every nine years.

(2) For gross alpha particle activity and uranium, if the average of the initial monitoring results for each contaminant is at or above the detection limit specified in Appendix B but at or below 1/2 of the PMCL, the community waterworks owner must collect and analyze for that contaminant using at least one sample at that entry point every six years. For combined radium-226 and radium-228, the analytical results must be combined. If the average of the combined initial monitoring results for radium-226 and radium-228 is at or above the detection limit specified in Appendix B but at or below 1/2 the PMCL, the community waterworks owner must collect and analyze for that contaminant using at least one sample at that entry point every six years.

(3) For gross alpha particle activity and uranium, if the average of the initial monitoring results for each contaminant is above 1/2 the PMCL but at or below the PMCL, the community waterworks owner must collect and analyze at least one sample at that entry point every three years. For combined radium-226 and radium-228, the analytical results must be combined. If the average of the combined initial monitoring results for radium-226 and radium-228 is above 1/2 the PMCL but at or below the MPCL, the community waterworks owner must collect and analyze at least

one sample at that entry point every three years.

(4) Community waterworks owners must use the samples collected during the reduced monitoring period to determine the monitoring frequency for subsequent monitoring periods (e.g., if a community waterworks' entry point is on a nine-year monitoring period, and the sample result is above 1/2 the PMCL, then the next monitoring period for that entry point is three years).

(5) If a community waterworks owner has a monitoring result that exceeds the PMCL while on reduced monitoring, the community waterworks owner must collect and analyze quarterly samples at that entry point until the community waterworks owner has results from four consecutive quarters that are below the PMCL, unless the community waterworks enters into another schedule as part of a formal compliance agreement with the commissioner.

d. Compositing: To fulfill quarterly monitoring requirements for gross alpha particle activity, radium-226, radium-228, or uranium, a community waterworks owner may composite up to four consecutive quarterly samples from a single entry point if analysis is done within a year of the first sample. The commissioner will treat analytical results from the composited sample as the average analytical result to determine compliance with the PMCLs and the future monitoring frequency. If the analytical result from the composited sample is greater than 1/2 the PMCL, the commissioner may direct the community waterworks owner to take additional quarterly samples before allowing the community waterworks owner to sample under a reduced monitoring schedule.

e. A gross alpha particle activity measurement may be substituted for the required radium-226 measurement provided that the measured gross alpha particle activity does not exceed 5 pCi/L. A gross alpha particle activity measurement may be substituted for the required uranium measurement provided that the measured gross alpha particle activity does not exceed 15 pCi/L.

The gross alpha measurement shall have a confidence interval of 95% (1.65, where is the standard deviation of the net counting rate of the sample) for radium-226 and uranium. When a community waterworks owner uses a gross alpha particle activity measurement in lieu of a radium-226 and/or uranium measurement, the gross alpha particle activity analytical result will be used to determine the future monitoring frequency for radium-226 and/or uranium. If the gross alpha particle activity result is less than the detection limit as specified in Appendix B, 1/2 the detection limit will be used to determine compliance and the future monitoring frequency.

2. Monitoring and compliance requirements for beta particle and photon

radioactivity. To determine compliance with the maximum contaminant levels in 12 VAC 5-590-400 B 5 for beta particle and photon radioactivity, a community waterworks owner must monitor at a frequency as follows:

a. Community waterworks owners (using surface or groundwater) designated by the commissioner as vulnerable must sample for beta particle and photon radioactivity. Community waterworks owners must collect quarterly samples for beta emitters and annual samples for tritium and strontium-90 at each entry point to the distribution system, beginning within one quarter after being notified by the commissioner. Community waterworks already designated by the commissioner must continue to sample until the commissioner reviews and either reaffirms or removes the designation.

(1) If the gross beta particle activity minus the naturally occurring potassium-40 beta particle activity at an entry point has a running annual average (computed quarterly) less than or equal to 50 pCi/L (screening level), the commissioner may reduce the frequency of monitoring at that entry point to once every three years. Community waterworks owners must collect all samples required in subdivision 2 a of this subsection during the reduced monitoring period.

(2) For community waterworks in the vicinity of a nuclear facility, the commissioner may allow the community waterworks owners to utilize environmental surveillance data collected by the nuclear facility in lieu of monitoring at the community waterworks' entry point(s), where the commissioner determines if such data is applicable to a particular community waterworks. In the event that there is a release from a nuclear facility, community waterworks owners which are using surveillance data must begin monitoring at the community waterworks' entry point(s) in accordance with subdivision 2 a of this subsection.

b. Community waterworks owners (using surface or groundwater) designated by the commissioner as utilizing waters contaminated by effluents from nuclear facilities must sample for beta particle and photon radioactivity. Community waterworks owners must collect quarterly samples for beta emitters and iodine-131 and annual samples for tritium and strontium-90 at each entry point to the distribution system, beginning within one quarter after being notified by the commissioner. Owners of community waterworks already designated by the commissioner as using waters contaminated by effluents from nuclear facilities must continue to sample until the commissioner reviews and either reaffirms or removes the designation.

(1) Quarterly monitoring for gross beta particle activity shall be based on the analysis of monthly samples or the analysis of a composite of three monthly samples. The former is recommended.

(2) For iodine-131, a composite of five consecutive daily samples shall be

analyzed once each quarter. As directed by the commission, more frequent monitoring shall be conducted when iodine-131 is identified in the finished water.

(3) Annual monitoring for strontium-90 and tritium shall be conducted by means of the analysis of a composite of four consecutive quarterly samples or analysis of four quarterly samples. The latter procedure is recommended.

(4) If the gross beta particle activity minus the naturally occurring potassium-40 beta particle activity at a sampling point has a running annual average (computed quarterly) less than or equal to 15 pCi/L (screening level), the commissioner may reduce the frequency of monitoring at that sampling point to every three years. Community waterworks owners must collect all samples required in subdivision 2 b of this subsection during the reduced monitoring period.

(5) For community waterworks in the vicinity of a nuclear facility, the commissioner may allow the community waterworks owner to utilize environmental surveillance data collected by the nuclear facility in lieu of the monitoring at the community waterworks' entry point(s), where the commissioner determines such data is applicable to a particular waterworks. In the event that there is a release from a nuclear facility, community waterworks owners which are using surveillance data must begin monitoring at the community waterworks' entry point(s) in accordance with subdivision 2 b of this subsection.

c. Owners of community waterworks designated by the commissioner to monitor for beta particle and photon radioactivity can not apply to the commissioner for a waiver from the monitoring frequencies specified in subdivision 2 a or b of this subsection.

d. Community waterworks owners may analyze for naturally occurring potassium-40 beta particle activity from the same or equivalent sample used for the gross beta particle activity analysis. Community waterworks owners are allowed to subtract the potassium-40 beta particle activity value from the total gross beta particle activity value to determine if the screening level is exceeded. The potassium-40 beta particle activity must be calculated by multiplying elemental potassium concentrations (in mg/l) by a factor of 0.82.

e. If the gross beta particle activity minus the naturally occurring potassium-40 beta particle activity exceeds the appropriate screening level, an analysis of the sample must be performed to identify the major radioactive constituents present in the sample and the appropriate doses must be calculated and summed to determine compliance with 12 VAC 5-590-400 B 5 a, using the formula in 12 VAC 590-400 B 5 b. Doses must also be calculated and combined for measured levels of tritium and strontium to determine

compliance.

f. Community waterworks owners must monitor monthly at the entry point(s) which exceed the maximum contaminant level in 12 VAC 5-590-400 B 5 beginning the month after the exceedance occurs. Community waterworks owners must continue monthly monitoring until the community waterworks has established, by a rolling average of three monthly samples, that the PMCL is being met. Community waterworks owners who establish that the PMCL is being met must return to quarterly monitoring until they meet the requirements set forth in subdivision 2 a (1) or 2 b (4) of this subsection.

3. General monitoring and compliance requirements for radionuclides.

a. The commissioner may require more frequent monitoring than specified in subdivisions 1 and 2 of this subsection, or may require confirmation samples at his discretion. The results of the initial and confirmation samples will be averaged for use in compliance determinations.

b. Each community waterworks owner shall monitor at the time designated by the commissioner during each compliance period.

c. Compliance: Compliance with 12 VAC 5-590-400 B 2 through 12 VAC 5-590-400 B 5 will be determined based on the analytical results(s) obtained at each entry point. If one entry point is in violation of a PMCL, the community waterworks is in violation of the PMCL.

(1) For community waterworks monitoring more than once per year, compliance with the PMCL is determined by a running annual average at each entry point. If the average of any entry point is greater than the PMCL, then the community waterworks is out of compliance with the PMCL.

(2) For community waterworks monitoring more than once per year, if any sample result will cause the running average to exceed the PMCL at any entry point, the community waterworks is out of compliance with the PMCL immediately.

(3) Community waterworks owners must include all samples taken and analyzed under the provisions of this section in determining compliance, even if that number is greater than the minimum required.

(4) If a community waterworks owner does not collect all required samples when compliance is based on a running annual average of quarterly samples, compliance will be based on the running average of the samples collected.

(5) If a sample result is less than the detection limit as specified in Appendix B, zero will be used to calculate the annual average, unless a gross alpha particle activity is being used in lieu of radium-226 and/or uranium. If the gross alpha particle activity result is less than the detection

limit as specified in Appendix B, 1/2 the detection limit will be used to calculate the annual average.

d. The commissioner has the discretion to delete results of obvious sampling or analytic errors.

e. If the PMCL for radioactivity set forth in 12 VAC 5-590-400 B through 12 VAC 5-590-400 B 5 is exceeded, the owner of a community waterworks must give notice to the commissioner pursuant to 12 VAC 5-590-530 and to the public as required by 12 VAC 5-590-540.

12 VAC 5-590-380. Bacteriological quality.

A. The standard sample volume for the coliform test shall consist of 100 milliliters.

B. Waterworks need only to determine the presence or absence of total coliforms; a determination of total coliform density is not required.

C. Primary Maximum Contaminant Levels (PMCLs) for microbiological contaminants.

1. The PMCL is based on the presence or absence of total coliforms in a sample, rather than coliform density.

a. A waterworks which is required to collect at least 40 samples per month is in compliance if no more than 5.0% of the samples collected during a month are total coliform positive.

b. A waterworks which is required to collect fewer than 40 samples per month is in compliance if no more than one sample collected during the month is total coliform positive.

2. Any fecal coliform positive repeat sample or E. coli positive repeat sample, or any total coliform positive repeat sample following a fecal coliform positive or E. coli positive routine sample constitutes a violation of the PMCL for total coliforms. For purposes of the public notification requirements in 12 VAC 5-590-540, this is a violation that may pose an acute risk to health and is a Tier 1 condition.

3. Compliance must be determined with the PMCL for total coliforms for each month in which monitoring for total coliforms is required.

4. The board hereby identifies the following as the best technology, treatment techniques, or other means available for achieving compliance with the maximum contaminant level for total coliforms.

a. Protection of wells from contamination by coliforms by appropriate placement and construction;

b. Maintenance of a disinfectant residual throughout the distribution system;

c. Proper maintenance of the distribution system including appropriate pipe replacement and repair procedures, main flushing programs, proper operation and maintenance of storage tanks and reservoirs, continual maintenance of

positive water pressure in all parts of the distribution system and an approved cross connection control program;

d. Filtration and disinfection of surface water or surface influenced groundwater or disinfection of ground water using strong oxidants such as chlorine, chlorine dioxide, or ozone.

D. A total coliform positive result is indicative of a breakdown in the protective barriers and shall be cause for special follow-up action to locate and eliminate the cause of contamination.

1. Repeat monitoring. If a routine sample is total coliform positive, the waterworks owner shall collect a set of repeat samples within 24 hours of being notified of the positive result. A waterworks owner who collects more than one routine sample a month shall collect no fewer than three repeat samples for each total coliform positive sample found. A waterworks owner who collects one routine sample a month or fewer shall collect no fewer than four repeat samples for each total coliform positive sample found.

2. The waterworks owner shall collect at least one repeat sample from the sampling tap where the original total coliform positive sample was taken, and at least one repeat sample at a tap within five service connections upstream and at least one repeat sample at a tap within five service connections downstream of the original sampling site. If a total coliform positive sample is at the end of the distribution system, or one away from the end of the distribution system, the division may waive the requirement to collect at least one repeat sample upstream or downstream of the original sampling site.

3. The waterworks owner shall collect all repeat samples on the same day, except the division may allow a waterworks with a single service connection to collect the required set of repeat samples over a four-day period or to collect a larger volume repeat sample(s) in one or more sample containers of any size as long as the total volume collected is at least 400 ml (300 ml for systems which collect more than one routine sample per month).

4. If one or more repeat samples in the set is total coliform positive, the waterworks owner shall collect an additional set of repeat samples in the manner specified in subdivisions 1 through 3 of this subsection. The additional samples shall be collected within 24 hours of being notified of the positive result. The waterworks owner shall repeat this process until either (i) total coliforms are not detected in one complete set of repeat samples or (ii) the PMCL for total coliforms has been exceeded and the division so notified.

5. Waterworks owners required to collect fewer than five routine samples per month and having one or more total coliform positive samples shall collect at least five routine samples during the next month the waterworks provides water to the public, except that the division may waive this requirement if the conditions of subdivision 5 a or 5 b of this subsection are met. The division shall not waive

the requirement for a system to collect repeat samples in subdivisions 1 through 4 of this subsection.

a. The division may waive the requirement to collect five routine samples the next month the waterworks provides water to the public if the division (or an agent of the owner previously approved by the division), performs a site visit before the end of the next month the waterworks provides water to the public. Although a sanitary survey need not be performed, the site visit shall be sufficiently detailed to allow the division to determine whether additional monitoring or any corrective action is needed.

b. The division may waive the requirement to collect five routine samples the next month the waterworks provides water to the public if the division has determined why the sample was total coliform positive and establishes that the waterworks owner has corrected the problem or will correct the problem before the end of the next month the waterworks serves water to the public. In this case, the division shall document this decision to waive the following month's additional monitoring requirement in writing, have it approved and signed by the supervisor of the state official who recommends such a decision, and make this document available to the EPA and public. The written documentation shall describe the specific cause of the total coliform positive sample and what action the waterworks owner has taken or will take to correct this problem. The division cannot waive the requirement to collect five routine samples the next month the waterworks provides water to the public solely on the grounds that all repeat samples are total coliform negative. Under this subdivision, a waterworks owner shall still take at least one routine sample before the end of the next month it serves water to the public and use the results to determine compliance with the MCL for total coliforms.

6. Results of all routine and repeat samples not invalidated by the division shall be included in determining compliance with the MCL for total coliforms.

7. Special purpose samples, such as those taken to determine whether disinfection practices are sufficient following pipe placement, replacement or repair, shall not be used to determine compliance. Repeat samples are not considered special purpose samples.

E. A total coliform positive sample invalidated under this paragraph does not count towards meeting the minimum monitoring requirements of this section.

1. The division may invalidate a total coliform positive sample only if all of the following conditions are met:

a. The laboratory establishes that improper sample analysis caused the total coliform positive result;

b. The division, on the basis of the results of repeat samples collected as required by subdivisions D 1 through 4 of this section determines that the total

coliform positive sample resulted from a domestic or other nondistribution system plumbing problem. The division cannot invalidate a sample on the basis of repeat sample results unless all repeat sample(s) collected at the same tap as the original total coliform-positive sample are also total coliform-positive, and all repeat samples collected within five service connections of the original tap are total coliform-negative (e.g., the division cannot invalidate a total coliform-positive sample on the basis of repeat samples if all the repeat samples are total coliform-negative, or if the waterworks has only one service connection); and

c. The division has substantial grounds to believe that a total coliform positive result is due to a circumstance or condition which does not reflect water quality in the distribution system. In this case, the waterworks owner shall still collect all repeat samples required under subdivisions D 1 through 4 of this section, and use them to determine compliance with the MCL for total coliforms. To invalidate a total coliform positive sample under this subdivision, the decision with the rationale for the decision shall be documented in writing, and approved and signed by the supervisor of the field engineer who recommended the decision. The division shall make this document available to EPA and the public. The written documentation shall state the specific cause of the total coliform positive sample, and what action the waterworks owner has taken, or will take, to correct this problem. The division shall not invalidate a total coliform positive sample solely on the grounds that all repeat samples are total coliform negative.

2. A laboratory must invalidate a sample because of sampling interference (i.e., turbid culture in absence of (i) gas production, or (ii) acid reaction; or exhibition of confluent growth; or production of colonies too numerous to count). The waterworks owners shall collect a replacement sample from the same location, and have it analyzed for the presence of total coliforms. The waterworks owner must continue to resample within 24 hours and have the samples analyzed until they obtain a valid result. The division may waive the 24-hour time limit on a case-by-case basis.

F. Fecal coliforms/Escherichia coli (E.coli) testing.

1. If any routine or repeat sample or replacement is total coliform positive, the waterworks owner shall analyze that total coliform positive culture medium to determine if fecal coliforms are present, except that the waterworks owner may test for E.coli in lieu of fecal coliforms. If fecal coliforms or E.coli are present, the waterworks owner must notify the division's appropriate field office by the end of the day when the waterworks is notified of the test result, unless the division's office is closed, in which case the division must be notified before the end of the next business day.

2. The division has the discretion to allow a waterworks, on a case-by-case basis, to forgo fecal coliform or E.coli testing on a total coliform-positive sample if

that waterworks assumes that the total coliform-positive sample is fecal coliform-positive or E.coli-positive. Accordingly, the waterworks must notify the division as specified in subdivision 1 of this subsection and the provisions of subdivision C 2 of this section apply.

G. Violation determination flowchart--See Appendix K.

H. Groundwater sources.

1. Groundwater shall be disinfected when the geometric mean of 20 or more samples (measured by the multiple-portion decimal-dilution (MPN) method) is greater than three.

2. Groundwater containing total coliform concentrations as measured by the multiple-portion decimal-dilution (MPN) method of 100 or more organisms per 100 milliliters based on the geometric mean of 20 or more samples constitutes unacceptable contamination for disinfection only.

3. Groundwater with widely fluctuating or increasing bacteriological results may be determined by the division to be unsuitable for disinfection treatment alone.

12 VAC 5-590-390. Chemical and physical quality.

A. Necessary action for noncompliance.

1. Inorganic chemicals. See 12 VAC 5-590-530 B and 12 VAC 5-590-540.

2. Organic chemicals. See 12 VAC 5-590-530 B and 12 VAC 5-590-540.

3. Turbidity. See 12 VAC 5-590-530 B and 12 VAC 5-590-540.

4. If the average concentration level of a substance is greater than the Secondary Maximum Contaminant Level, the division will determine whether treatment to remove the substance can be accomplished or more suitable supplies are, or can be made available. This determination will be made as quickly as possible. If either of these alternatives is possible, corrective action shall be promptly taken by the owner if deemed necessary by the division.

B. Specific limits. No attempt has been made to prescribe specific limits for every contaminant that might enter a water supply or waterworks. Although the need exists for continued attention to the entry of chemical and physical substances into water, the limits are confined to substances recognized as being detrimental to the health or well-being of the consumer. Limits for innumerable substances would require an impossible burden of analytical examination. The specific limits included in these regulations are listed in Tables 2.2, 2.3, and 2.4.

12 VAC 5-590-400. Radiological quality.

The effects of human radiation exposure are viewed as harmful, and any unnecessary exposure to ionizing radiation should be avoided.

A. Maximum contaminant level goals for radionuclides are listed in subsection A of Table 2.5 of 12 VAC 5-590-440.

B. Maximum contaminant levels for radionuclides are applicable to community waterworks only and are listed in this section and subsection B of Table 2.5.

1. (Reserved.)

2. PMCL for combined radium-226 and radium-228. The primary maximum contaminant level for combined radium-226 and radium-228 is 5 pCi/L. The combined radium-226 and radium-228 value is determined by the addition of the results of the analysis for radium-226 and the analysis for radium-228.

3. PMCL for gross alpha particle activity (excluding radon and uranium). The primary maximum contaminant level for gross alpha particle activity (including radium-226 but excluding radon and uranium) is 15 pCi/L.

4. PMCL for uranium. The primary maximum contaminant level for uranium is 30 μg/l.

5. PMCL for beta particle and photon radioactivity.

a. The average annual concentration of beta particle and photon radioactivity from man-made radionuclides in drinking water must not produce an annual dose equivalent to the total body or any internal organ greater than 4 millirem/year (mrem/year).

b. Except for the radionuclides listed in schedule 1 of Table 2.5, the concentration of man-made radionuclides causing 4 mrem total body or organ dose equivalents must be calculated on the basis of 2 liter per day drinking water intake using the 168 hour data list in "Maximum Permissible Body Burdens and Maximum Permissible Concentrations of Radionuclides in Air and in Water for Occupational Exposure," NBX (National Bureau of Standards) Handbook 69 as amended August 1963, U.S. Department of Commerce. A copy of this document may be reviewed at the Virginia Department of Health Office of Drinking Water office in Richmond, Virginia. If two or more radionuclides are present, the sum of their annual dose equivalent to the total body or to any organ shall not exceed 4 mrem/year.

6. Compliance dates.

Compliance dates for combined radium-226 and radium-228, gross alpha particle activity, gross beta particle and photon radioactivity, and uranium: community waterworks owners must comply with the PMCLs listed in subdivisions 2, 3, 4, and 5 of this subsection beginning December 8, 2003, and compliance shall be determined in accordance with the requirements of 12 VAC 5-590-370 D. Compliance with reporting requirements for the radionuclides under 12 VAC 5-590-545 and 12 VAC 5-590-540 is required on December 8, 2003.

12 VAC 5-590-410. Determination of compliance.

For the purposes of determining compliance with a PMCL or action level, the following criteria shall be used:

A. Bacteriological results. Compliance with the PMCL for coliform bacteria shall be determined as specified in 12 VAC 5-590-380 C. Repeat samples shall be used as a basis for determining compliance with these regulations.

B. Inorganic chemicals.

1. Antimony, asbestos, barium, beryllium, cadmium, cyanide (as free cyanide), chromium, fluoride, mercury, nickel, selenium, and thallium. Where the results of sampling for antimony, asbestos, barium, beryllium, cadmium, cyanide (as free cyanide), chromium, fluoride, mercury, nickel, selenium, or thallium exceed the PMCL, the waterworks shall take a confirmation sample, at the same sampling point, within two weeks of notification of the analytical results of the first sample.

a. The results of the initial and confirmation samples shall be averaged to determine compliance with subdivision 1 c of this subsection. The commissioner has the discretion to delete results of obvious sampling errors.

b. The commissioner may require more frequent monitoring.

c. Compliance with antimony, asbestos, barium, beryllium, cadmium, cyanide (as free cyanide), chromium, fluoride, mercury, nickel, selenium, and thallium in Table 2.2 of 12 VAC 5-590-440 shall be determined based on the analytical result(s) obtained at each sampling point.

(1) For waterworks which are conducting monitoring more frequently than annually, compliance with the PMCL for antimony, asbestos, barium, beryllium, cadmium, cyanide (as free cyanide), chromium, fluoride, mercury, nickel, selenium, and thallium is determined by a running annual average at each sampling point. If the average at any sampling point is greater than the PMCL, then the waterworks is out of compliance. If any one sample would cause the annual average to be exceeded, then the waterworks is out of compliance immediately. Any sample below the detection limit shall be calculated at zero for the purpose of determining the annual average. (NOTE: Refer to detection definition at 12 VAC 5-590-370 B 2 h.)

(2) For waterworks which are monitoring annually, or less frequently, the waterworks is out of compliance with the PMCL for antimony, asbestos, barium, beryllium, cadmium, cyanide (as free cyanide), chromium, fluoride, mercury, nickel, selenium, and thallium if the average of the original sample and a confirmation sample of a contaminant at any sampling point is greater than the PMCL. However, if the confirmation sample is not collected, the waterworks is in violation of the PMCL for antimony, asbestos, barium, beryllium, cadmium, cyanide (as free cyanide), chromium, fluoride, mercury, nickel, selenium, or thallium.

2. Nitrate and nitrite. Compliance with the PMCL is determined based on one sample from each sampling point if the levels of these contaminants are below the PMCLs. Where nitrate or nitrite sample results exceed the PMCL, the

waterworks owner shall take a confirmation sample from the same sampling point that exceeded the PMCL within 24 hours of the waterworks' receipt of the analytical results of the first sample. The results of the initial and confirmation sample shall be averaged to determine compliance with this subdivision. Waterworks owners unable to comply with the 24-hour sampling requirement must immediately notify the consumers in the area served by the waterworks in accordance with 12 VAC 5-590-540. Waterworks exercising this option must take and analyze a confirmation sample within two weeks of notification of the analytical results of the first sample. The commissioner may require more frequent monitoring. The commissioner has the discretion to delete results of obvious sampling errors.

3. Compliance with the PMCL for arsenic is determined by the average of four analyses made pursuant to 12 VAC 5-590-370 B 1 d (6). When the average is rounded off to the same number of significant figures as the PMCL and exceeds the PMCL the owner shall notify the commissioner and give notice to the public pursuant to 12 VAC 5-590-540. Monitoring after public notification shall be at a frequency designated by the commissioner and shall continue until the PMCL has not been exceeded in two successive samples or until a monitoring schedule as a condition to a variance, exemption or enforcement action shall become effective.

C. Organic chemicals.

1. VOCs and SOCs. A confirmation sample shall be required for positive results for contaminants listed in Table 2.3. The commissioner has the discretion to delete results of obvious sampling errors from this calculation.

a. The results of the initial and confirmation sample shall be averaged to determine the waterworks' compliance in accordance with subdivision 1 b of this subsection.

b. Compliance with Table 2.3 shall be determined based on the analytical results obtained at each sampling point.

(1) For waterworks which are conducting monitoring more frequently than annually, compliance is determined by a running annual average of all samples taken at each sampling point. If the annual average of any sampling point is greater than the PMCL, then the waterworks is out of compliance. If the initial sample or a subsequent sample would cause the annual average to be exceeded, then the waterworks is out of compliance immediately. Any samples below the detection limit shall be calculated as zero for purposes of determining the annual average. (Note: Refer to detection definition at 12 VAC 5-590-370 B 2 h.)

(2) If monitoring is conducted annually, or less frequently, the waterworks is out of compliance if the level of a contaminant at any sampling point is greater than the PMCL. The determination of compliance will be based on

the average of the initial and confirmation sample.

2. Disinfectant residuals, disinfection byproducts and disinfection byproduct precursors. Compliance with 12 VAC 5-590-370 B 3 a through B 3 k is as follows:

a. General requirements.

(1) Where compliance is based on a running annual average of monthly or quarterly samples or averages and the waterworks fails to monitor for TTHM, HAA5, or bromate, this failure to monitor will be treated as a monitoring violation for the entire period covered by the annual average. Where compliance is based on a running annual average of monthly or quarterly samples or averages and the waterworks' failure to monitor makes it impossible to determine compliance with MRDLs for chlorine and chloramines, this failure to monitor will be treated as a monitoring violation for the entire period covered by the annual average.

(2) All samples taken and analyzed under the provisions of this subpart must be included in determining compliance, even if that number is greater than the minimum required.

(3) If during the first year of monitoring under 12 VAC 5-590-370 B 3 b, any individual quarter's average will cause the running annual average of that waterworks to exceed the PMCL in Table 2.12 and Table 2.13, the waterworks is out of compliance at the end of that quarter.

b. Disinfection byproducts.

(1) TTHMs and HAA5.

(a) For waterworks monitoring quarterly, compliance with PMCLs in Table 2.13 must be based on a running annual arithmetic average, computed quarterly, of quarterly arithmetic averages of all samples collected by the waterworks as prescribed by 12 VAC 5-590-370 B 3 e (1).

(b) For waterworks monitoring less frequently than quarterly, the waterworks demonstrate PMCL compliance if the average of samples taken that year under the provisions of 12 VAC 5-590-370 B 3 e (1) does not exceed the PMCLs in Table 2.13. If the average of these samples exceeds the PMCL, the waterworks must increase monitoring to once per quarter per treatment plant and such a waterworks is not in violation of the PMCL until it has completed one year of quarterly monitoring, unless the result of fewer then four quarter of monitoring will cause the running annual average to exceed the PMCL, in which case the waterworks is in violation at the end of that quarter. Waterworks required to increase monitoring frequency to quarterly monitoring must calculate compliance by including the sample that triggered the increase monitoring plus the following three quarter of

monitoring.

(c) If the running annual arithmetic average of quarterly averages covering any consecutive four-quarter period exceeds the PMCL in Table 2.12 and Table 2.13, the waterworks is in violation of the PMCL and must notify the public pursuant to 12 VAC 5-590-540 in addition to reporting to the commissioner pursuant to 12 VAC 5-590-530.

(d) If a waterworks fails to complete four consecutive quarters of monitoring, compliance with the PMCL in Table 2.13 for the last four-quarter compliance period must be based on an average of the available data.

(2) Bromate. Compliance must be based on a running annual arithmetic average, computed quarterly, of monthly samples (or, for months in which the waterworks takes more than one sample, the average of all samples taken during the month) collected by the waterworks as prescribed by 12 VAC 5-590-370 B 3 g. If the average of samples covering any consecutive four-quarter period exceeds the PMCL in Table 2.13, the waterworks is in violation of the PMCL and must notify the public pursuant to 12 VAC 5-590-540, in addition to reporting to the commissioner pursuant to 12 VAC 5-590-530. If a waterworks fails to complete 12 consecutive months' monitoring, compliance with the PMCL for the last four-quarter compliance period must be based on an average of the available data.

(3) Chlorite. Compliance must be based on an arithmetic average of each three sample set taken in the distribution system as prescribed by 12 VAC 5-590-370 B 3 f (1) (a), (b) and (c). If the arithmetic average of any three sample set exceeds the PMCL in Table 2.13, the waterworks is in violation of the PMCL and must notify the public pursuant to 12 VAC 5-590-540, in addition to reporting to the commissioner pursuant to 12 VAC 5-590-530.

c. Disinfectant residuals.

(1) Chlorine and chloramines.

(a) Compliance must be based on a running annual arithmetic average, computed quarterly, of monthly averages of all samples collected by the waterworks under 12 VAC 5-590-370 B 3 h (1) (a). If the average covering any consecutive four-quarter period exceeds the MRDL in Table 2.12, the waterworks is in violation of the MRDL and must notify the public pursuant to 12 VAC 5-590-540, in addition to reporting to the commissioner pursuant to 12 VAC 5-590-530.

(b) In cases where waterworks switch between the use of chlorine and chloramines for residual disinfection during the year, compliance must be determined by including together all monitoring results of both chlorine and chloramines in calculating compliance. Reports submitted

pursuant to 12 VAC 5-590-530 must clearly indicate which residual disinfectant was analyzed for each sample.

(2) Chlorine dioxide.

(a) Acute violations. Compliance must be based on consecutive daily samples collected by the waterworks under 12 VAC 5-590-370 B 3 h (2) (a). If any daily sample taken at the entrance to the distribution system exceeds the MRDL in Table 2.12, and on the following day one (or more) of the three samples taken in the distribution system exceed the MRDL, the waterworks is in violation of the MRDL and must take immediate corrective action to lower the level of chlorine dioxide below the MRDL and must notify the public pursuant to the procedures for Tier 1 conditions in 12 VAC 5-590-540 in addition to reporting to the commissioner in pursuant to 12 VAC 5-590-530. Failure to take samples in the distribution system the day following an exceedance of the chlorine dioxide MRDL at the entrance to the distribution system will also be considered an MRDL violation and the waterworks must notify the public of the violation in accordance with the provisions for Tier 1 conditions in 12 VAC 5-590-540 in addition to reporting to the commissioner in pursuant to 12 VAC 5-590-530.

(b) Nonacute violations. Compliance must be based on consecutive daily samples collected by the waterworks under 12 VAC 5-590-370 B 3 h (2) (a). If any two consecutive daily samples taken at the entrance to the distribution system exceed the MRDL in Table 2.12 and all distribution system samples taken are below the MRDL, the waterworks is in violation of the MRDL and must take corrective action to lower the level of chlorine dioxide below the MRDL at the point of sampling and shall notify the public pursuant to the procedures for Tier 2 conditions in 12 VAC 5-590-540 in addition to reporting to the commissioner in pursuant to 12 VAC 5-590-530. Failure to monitor at the entrance to the distribution system the day following an exceedance of the chlorine dioxide MRDL at the entrance to the distribution system is also an MRDL violation and the waterworks must notify the public of the violation in accordance with the provisions for Tier 2 conditions in 12 VAC 5-590-540 in addition to reporting to the commissioner in pursuant to 12 VAC 5-590-530.

d. Disinfection byproduct precursors (DBPP). Compliance must be determined as specified by 12 VAC 5-590-420 H 3. Waterworks may begin monitoring to determine whether Step 1 TOC removals can be met 12 months prior to the compliance date for the waterworks. This monitoring is not required and failure to monitor during this period is not a violation. However, any waterworks that does not monitor during this period, and then determines in the first 12 months after the compliance date that it is not able to meet the

Step 1 requirements in 12 VAC 5-590-420 H 2 b and must therefore apply for alternate minimum TOC removal (Step 2) requirements, is not eligible for retroactive approval of alternate minimum TOC removal (Step 2) requirements as allowed pursuant to 12 VAC 5-590-420 H 2 c and is in violation. Waterworks may apply for alternate minimum TOC removal (Step 2) requirements any time after the compliance date. For waterworks required to meet Step 1 TOC removals, if the value calculated under 12 VAC 5-590-420 H 3 a (4) is less than 1.00, the waterworks is in violation of the treatment technique requirements and must notify the public pursuant to 12 VAC 5-590-540 in addition to reporting to the commissioner pursuant to 12 VAC 5-90-530.

D. Radiological results (gross alpha, combined radium-226 and radium-228, uranium and man-made radioactivity). Compliance with the radiological Primary Maximum Contaminant Levels shall be in accordance with 12 VAC 5-590-370 D 3 c. Primary Maximum Contaminant Levels are indicated in subsection B of Table 2.5. Sampling for radiological analysis shall be in compliance with 12 VAC 5-590-370 D 1 and D 2. Furthermore, compliance shall be determined by rounding off results to the same number of significant figures as the Primary Maximum Contaminant Level for the substance in question.

E. Lead and copper action levels.

1. The lead action level is exceeded if the concentration of lead in more than 10% of tap water samples collected during any monitoring period conducted in accordance with 12 VAC 5-590-370 B 6 a is greater than 0.015 mg/l (i.e., if the "90th percentile" lead level is greater than 0.015 mg/l).

2. The copper action level is exceeded if the concentration of copper in more than 10% of tap water samples collected during any monitoring period conducted in accordance with 12 VAC 5-590-370 B 6 a is greater than 1.3 mg/l (i.e., if the "90th percentile" copper level is greater than 1.3 mg/l).

3. The 90th percentile lead and copper levels shall be computed as follows:

a. The results of all lead or copper samples taken during a monitoring period shall be placed in ascending order from the sample with the lowest concentration to the sample with the highest concentration. Each sampling result shall be assigned a number, ascending by single integers beginning with the number 1 for the sample with the lowest contaminant level. The number assigned to the sample with the highest contaminant level shall be equal to the total number of samples taken.

b. The number of samples taken during the monitoring period shall be multiplied by 0.9.

c. The contaminant concentration in the numbered sample yielded by the calculation in subdivision 3 b of this subsection is the 90th percentile contaminant level.

d. For waterworks serving fewer than 100 people that collect five samples per monitoring period, the 90th percentile is computed by taking the average of the highest and second highest concentrations.

F. Turbidity. The requirements in this subsection apply to filtered waterworks until June 29, 1993. The requirements in this section apply to unfiltered waterworks with surface water sources or groundwater sources under the direct influence of surface water that are required to install filtration equipment until June 29, 1993, or until filtration is installed, whichever is later. When a sample exceeds the PMCL for turbidity a confirmation sample shall be collected for analysis as soon as possible. In cases where a turbidimeter is required at the waterworks, the preferable resampling time is within one hour of the initial sampling. The repeat sample shall be the sample used for the purpose of calculating the monthly average. Compliance for public notification purposes shall be based on the monthly averages of the daily samples. However, public notification is also required if the average of samples taken on two consecutive days exceeds five NTU.

G. All analyses for PMCL and action level compliance determinations shall be consistent with current Environmental Protection Agency Regulations found at 40 CFR Part 141.

12 VAC 5-590-420. Treatment technique requirement.

This section establishes treatment technique requirements in lieu of maximum contaminant levels for specified contaminants. Failure to meet any requirement of this section after the applicable date specified is a treatment technique violation.

A. Beginning June 29, 1993, the filtration and disinfection provisions of this section are required treatment techniques for any waterworks supplied by a surface water source and waterworks supplied by a groundwater source under the direct influence of surface water. Prior to that date, waterworks are governed by the disinfection requirements of 12 VAC 5-590-500. In addition, this section establishes treatment technique requirements in lieu of PMCL's for the following contaminants: Giardia lamblia, viruses, heterotrophic bacteria (HPC), Legionella Cryptosporidium (for waterworks serving at least 10,000 people and using surface water or groundwater under the direct influence of surface water), and turbidity. Each waterworks with a surface water source or a groundwater source under the direct influence of surface water shall provide treatment of that source water that complies with these treatment technique requirements. The treatment technique requirements consist of installing and properly operating water treatment processes which reliably achieve:

1. At least 99.9% (3-log) removal and/or inactivation of Giardia lamblia cysts between a point where the raw water is not subject to recontamination by surface water runoff and a point downstream before or at the first customer; and

2. At least 99.99% (4-log) removal and/or inactivation of viruses between a point where the raw water is not subject to recontamination by surface water runoff and a point downstream before or at the first customer.

3. Beginning January 1, 2002, waterworks serving at least 10,000 people shall also reliably achieve at least 99% (2-log) removal of Cryptosporidium between a point where the raw water is not subject to recontamination by surface water runoff and a point downstream before or at the first customer.

4. Beginning January 1, 2005, waterworks serving less than 10,000 people shall also reliably achieve at least 99% (2-log) removal of Cryptosporidium between a point where the raw water is not subject to recontamination by surface water runoff and a point downstream before or at the first customer.

B. A waterworks using a surface water source or a groundwater source under the direct influence of surface water is considered to be in compliance with the requirements of subsection A of this section if it meets the following disinfection and filtration requirements:

1. Disinfection. Waterworks with a surface water source or a groundwater source under the direct influence of surface water must provide disinfection treatment in accordance with this section by June 29, 1993.

a. The disinfection treatment must be sufficient to ensure that the total treatment processes of that waterworks achieve at least 99.9% (3-log) inactivation and/or removal of Giardia lamblia cysts and at least 99.99% (4-log) inactivation and/or removal of viruses.

b. The residual disinfectant concentration in the water entering the distribution system cannot be less than 0.2 mg/L for more than four hours.

c. The residual disinfectant concentration in the distribution system, measured as total chlorine, combined chlorine, or chlorine dioxide cannot be undetectable in more than 5.0% of the samples each month, for any two consecutive months that the waterworks serves water to the public. Water in the distribution system with a heterotrophic bacteria concentration less than or equal to 500/mL, measured as heterotrophic plate count (HPC) is deemed to have a detectable disinfectant residual for purposes of determining compliance with this requirement. Thus, the value "V" in percent in the following formula cannot exceed 5.0% in one month, for any two consecutive months.

$V = (c + d + e) / (a + b) X 100$

a = number of instances where the residual disinfectant concentration is measured;

b = number of instances where the residual disinfectant concentration is not measured but HPC is measured;

c = number of instances where the residual disinfectant concentration is measured but not detected and no HPC is measured;

d = number of instances where no residual disinfectant concentration is

detected and where the HPC is greater than 500/mL; and

e = number of instances where the residual disinfectant concentration s not measured and HPC is greater than 500/mL.

d. The division may determine, based on site-specific considerations, that a waterworks owner has no means for having a sample transported and analyzed for HPC by a certified laboratory under the requisite time and temperature conditions and the waterworks is providing adequate disinfection in the distribution system, that the requirements of subdivision B 1 c of this section does not apply.

2. Filtration. (Also see 12 VAC 5-590-880.) All waterworks that use a surface water source or a groundwater source under the direct influence of surface water shall provide filtration treatment by June 29, 1993, by using one of the following methods:

a. Conventional filtration or direct filtration.

Beginning January 1, 2002, waterworks serving at least 10,000 people and January 1, 2005, waterworks serving less than 10,000 people using conventional filtration treatment or direct filtration must:

(1) Achieve a filtered water turbidity of less than or equal to 0.3 NTU in at least 95% of the measurements taken each month. Samples must be representative of the waterworks' filtered water.

(2) The turbidity level of representative samples of a system's filtered water must at no time exceed 1 NTU, measured as specified in 12 VAC 5-590-440.

(3) A system that uses lime softening may acidify representative samples prior to analysis using a protocol approved by the commissioner.

b. Slow sand filtration.

(1) The turbidity level of representative samples of a waterworks' filtered water must be less than or equal to one NTU in at least 95% of the measurements taken each month, except that if the division determines there is no significant interference with disinfection at a higher turbidity level, the division may substitute this higher turbidity limit for that waterworks.

(2) The turbidity level of representative samples of a waterworks' filtered water shall at no time exceed five NTU.

c. Diatomaceous earth filtration.

(1) The turbidity level of representative samples of a waterworks' filtered water shall be less than or equal to one NTU in at least 95% of the measurements taken each month.

(2) The turbidity level of representative samples of a waterworks' filtered water shall at no time exceed five NTU.

d. Other filtration technologies. A waterworks owner may use a filtration technology not listed in subdivisions 2 a through c of this subsection if the owner demonstrates to the division (by pilot plant studies or other means) that the alternative filtration technology, in combination with disinfection treatment, achieves 99.9% removal (3-log) and/or inactivation of Giardia lamblia cysts, 99.99% removal (4-log) and/or inactivation of viruses, and 99% removal (2-log) of Cryptosporidium oocysts. For a waterworks owner that makes this demonstration, a turbidity limit of representative samples of a waterworks' filtered water, not to exceed 0.3 NTU, will be established by the commissioner, which the waterworks must meet at least 95% of the time. In addition, the commissioner will establish a maximum turbidity limit of representative samples of a waterworks' filtered water, not to exceed 1 NTU, that the waterworks must not exceed at any time. These turbidity limits shall consistently achieve the removal rates and/or inactivation rates stated in this subdivision.

e. Each waterworks using a surface water source or groundwater source under the direct influence of surface water shall be operated by licensed operators of the appropriate classification as per the Virginia Board for Waterworks and Wastewater Works Operators Regulations (18 VAC 155-20).

f. If the division has determined that a waterworks has a surface water source or a groundwater source under the direct influence of surface water, filtration is required. The waterworks shall provide disinfection during the interim before filtration is installed as follows:

(1) The residual disinfectant concentration in the distribution system cannot be less than 2.0 mg/L for more than four hours.

(2) The waterworks owner shall issue continuing boil water notices through the public notification procedure in 12 VAC 5-590-540 until such time as the required filtration equipment is installed.

(3) As an alternative to subdivisions B f 2 (1) and (2) of this section, the waterworks owner may demonstrate that the source can meet the appropriate C-T values shown in Appendix L and be considered to satisfy the requirements for 99.9% removal of Giardia cysts and virus, respectively. In addition, the waterworks owner must comply with the following:

(a) Justify that other alternative sources of supply meeting these regulations are not immediately available.

(b) Analysis of the source is performed quarterly for the contaminants listed in Tables 2.2, 2.3, and 2.4. The primary maximum contaminant levels shall not be exceeded.

(c) Daily turbidity monitoring and maintenance of the turbidity level not to exceed five NTU.

(d) MPN analysis of the raw water based on the minimum sample frequency chart below:

Population Served	Coliform Samples/Week
≤500	1
501 - 3,300	2
3,301 - 10,000	3
10,001 - 25,000	4
> 25,000	5

Note: Must be taken on separate days.

(e) Bacteriological sampling of the distribution system at a frequency of twice that required by Table 2.1.

C. Lead and copper corrosion control treatment requirements.

1. The owners of all community and nontransient noncommunity waterworks shall install and operate optimum corrosion control treatment by completing the corrosion control treatment requirements described below which are applicable to such waterworks owners under subdivision C 2 of this section.

a. Waterworks owners proposal regarding corrosion control treatment. Based upon the results of lead and copper tap monitoring and water quality parameter monitoring, the owners of small and medium-size waterworks exceeding the lead or copper action level shall propose installation of one or more of the corrosion control treatments listed in subdivision C 1 c (1) of this section which the waterworks owner believes constitutes optimal corrosion control for that waterworks. The commissioner may require the waterworks owner to conduct additional water quality parameter monitoring in accordance with 12 VAC 5-590-370 B 6 b (2) of this section to assist the commissioner in reviewing the proposal.

b. Applicability of studies of corrosion control treatment (applicable to small and medium-size waterworks). The commissioner may require the owner of any small or medium-size waterworks that exceeds the lead or copper action level to perform corrosion control studies under subdivision C 1 c of this section to identify optimal corrosion control treatment for the waterworks.

c. Corrosion control studies.

(1) The owner of any waterworks required by the commissioner to perform corrosion control studies shall evaluate the effectiveness of each of the following treatments, and, if appropriate, combinations of the following treatments to identify the optimal corrosion control treatment for that

waterworks:

(a) Alkalinity and pH adjustment;

(b) Calcium hardness adjustment; and

(c) The addition of a phosphate or silicate based corrosion inhibitor at a concentration sufficient to maintain an effective corrosion inhibitor residual concentration in all test tap samples.

(2) The waterworks owner shall evaluate each of the corrosion control treatments using either pipe rig/loop tests, metal coupon tests, partial-system tests, or analyses based on documented analogous treatments with other waterworks of similar size, water chemistry and distribution system configuration.

(3) The waterworks owner shall measure the following water quality parameters in any tests conducted under this paragraph before and after evaluating the corrosion control treatments listed above:

(a) Lead;

(b) Copper;

(c) pH;

(d) Alkalinity;

(e) Calcium;

(f) Conductivity;

(g) Orthophosphate (when an inhibitor containing a phosphate compound is used);

(h) Silicate (when an inhibitor containing a silicate compound is used);

(i) Water temperature.

(4) The waterworks owner shall identify all chemical or physical constraints that limit or prohibit the use of a particular corrosion control treatment and document such constraints with at least one of the following:

(a) Data and documentation showing that a particular corrosion control treatment has adversely affected other water treatment processes when used by another waterworks with comparable water quality characteristics; and/or

(b) Data and documentation demonstrating that the waterworks has previously attempted to evaluate a particular corrosion control treatment and has found that the treatment is ineffective or adversely affects other water quality treatment processes.

(5) The waterworks owner shall evaluate the effect of the chemicals used for corrosion control treatment on other water quality treatment processes.

(6) On the basis of an analysis of the data generated during each evaluation, the waterworks owner shall propose to the field office in writing, the treatment option that the corrosion control studies indicate constitutes optimal corrosion control treatment for that waterworks. The owner shall provide a rationale for its recommendation along with all supporting documentation specified in subdivision C 1 c (1) through (5) of this section.

d. Approval of optimal corrosion control treatment.

(1) Based upon consideration of available information including, where applicable, studies performed under subdivision C 1 c of this section and a waterworks' owner's proposed treatment alternative, the commissioner shall either approve the corrosion control treatment option recommended by the owner, or designate alternative corrosion control treatment(s) from among those listed in subdivision C 1 c (1) of this section. When approving optimal treatment the commissioner shall consider the effects that additional corrosion control treatment will have on water quality parameters and on other water quality treatment processes.

(2) The commissioner shall notify the waterworks owner of its determination on optimal corrosion control treatment in writing and explain the basis for this determination. If the commissioner requests additional information to aid a review, the owner shall provide the information.

e. Installation of optimal corrosion control. Each waterworks owner shall properly install and operate throughout the waterworks the optimal corrosion control treatment approved by the commissioner under subdivision C 1 d of this section and under 12 VAC 5-590-190.

f. Commissioner's review of treatment and specification of optimal water quality control parameters.

(1) The commissioner shall evaluate the results of all lead and copper tap samples and water quality parameter samples submitted by the waterworks owner and determine whether the owner has properly installed and operated the optimal corrosion control treatment approved by the commissioner in subdivision C 1 d of this section. Upon reviewing the results of tap water and water quality parameter monitoring by the owner, both before and after the waterworks installs optimal corrosion control treatment, the commissioner shall designate:

(a) A minimum value or a range of values for pH measured at each entry point to the distribution system;

(b) A minimum pH value, measured in all tap samples. Such value

shall be equal to or greater than 7.0, unless the commissioner determines that meeting a pH level of 7.0 is not technologically feasible or is not necessary for the waterworks owner to optimize corrosion control;

(c) If a corrosion inhibitor is used, a minimum concentration or a range of concentrations for the inhibitor, measured at each entry point to the distribution system and in all tap samples, that the commissioner determines is necessary to form a passivating film on the interior walls of the pipes of the distribution system;

(d) If alkalinity is adjusted as part of optimal corrosion control treatment, a minimum concentration or a range of concentrations for alkalinity, measured at each entry point to the distribution system and in all tap samples;

(e) if calcium carbonate stabilization is used as part of corrosion control, a minimum concentration or a range of concentrations for calcium, measured in all tap samples.

(2) The values for the applicable water quality control parameters listed above shall be those that the commissioner determines to reflect optimal corrosion control treatment for the waterworks. The commissioner may designate values for additional water quality control parameters determined by the commissioner to reflect optimal corrosion control for the waterworks. The commissioner shall notify the waterworks owner in writing of these determinations and explain the basis for its decisions.

g. Continued operation and monitoring. The owners of all waterworks optimizing corrosion control shall continue to operate and maintain optimum corrosion control treatment, including maintaining water quality parameters at or above minimum values or within ranges designated by the commissioner under subdivision C 1 f of this section, in accordance with this paragraph for all samples collected under 12 VAC 5-590-370 B 6 b (4), (5) and (6). Compliance with the requirements of this paragraph shall be determined every six months, as specified under 12 VAC 5-590-370 B 6 b (4). The owner of a waterworks is out of compliance with the requirements of this paragraph for a six-month period if excursions occur for any commissioner-specified parameter on more than nine days during the period. An excursion occurs whenever the daily value for one or more of the water quality parameters measured at a sampling location is below the minimum value or outside the range designated by the commissioner. Daily values are calculated as follows. The commissioner has discretion to delete results of obvious sampling errors from this calculation.

(1) On days when more than one measurement for the water quality parameter is collected at the sampling location, the daily value shall be the average of all results collected during the day regardless of whether they

are collected through continuous monitoring, grab sampling, or a combination of both.

(2) On days when only one measurement for the water quality parameter is collected at the sampling location, the daily value shall be the result of that measurement.

(3) On days when no measurement is collected for the water quality parameter at the sampling location, the daily value shall be the daily value calculated on the most recent day on which the water quality parameter was measured at the sample site.

h. Modification of the commissioner's treatment decisions. Upon his own initiative or in response to a request by a waterworks owner or other interested party, the commissioner may modify its determination of the optimal corrosion control treatment under subdivision C 1 d of this section or optimal water quality control parameters under subdivision C 1 f of this section. A request for modification by an owner or other interested party shall be in writing, explain why the modification is appropriate, and provide supporting documentation. The commissioner may modify the determination where it is concluded that such change is necessary to ensure that the waterworks continues to optimize corrosion control treatment. A revised determination shall be made in writing, set forth the new treatment requirements, explain the basis for the commissioner's decision, and provide an implementation schedule for completing the treatment modifications.

2. Corrosion control treatment steps.

a. Waterworks owners shall complete the applicable corrosion control treatment requirements described in subdivision C 1 of this section by the deadlines established in this section.

(1) The owner of a large waterworks (serving greater than 50,000 persons) shall complete the corrosion control treatment steps specified in subdivision C 2 d of this section, unless the owner is deemed to have optimized corrosion control under subdivision C 2 b (2) of this section or C 2 b (3) of this section.

(2) The owner of a small waterworks (serving less than 3,300 persons) and a medium-size waterworks (serving greater than 3,300 and less than 50,000 persons) shall complete the corrosion control treatment steps specified in subdivision C 2 e of this section, unless the owner is deemed to have optimized corrosion control under subdivision C 2 b (1) through (3) of this section.

b. A waterworks owner is deemed to have optimized corrosion control and is not required to complete the applicable corrosion control treatment steps identified in this section if the waterworks satisfies one of the criteria specified in subdivisions C 2 b (1) through (3) below. The owner of any such

waterworks that is deemed to have optimized corrosion control, and which has treatment in place, shall continue to operate and maintain optimal corrosion control treatment and meet any requirements that the commissioner determines appropriate to ensure optimal corrosion control treatment is maintained.

(1) The owner of a small or medium-size waterworks is deemed to have optimized corrosion control if the waterworks meets the lead and copper action levels during each of two consecutive six-month monitoring periods conducted in accordance with 12 VAC 5-590-370 B 6 a.

(2) Any waterworks owner may be deemed by the commissioner to have optimized corrosion control treatment if the owner demonstrates to the satisfaction of the commissioner that the owner has conducted activities equivalent to the corrosion control steps applicable to such waterworks under this section. If the commissioner makes this determination, the owner shall be provided with a written notice explaining the basis for the decision and the notice shall specify the water quality control parameters representing optimal corrosion control in accordance with subdivision C 1 f of this section. Any waterworks owner deemed to have optimized corrosion control under this paragraph shall operate in compliance with the specified water quality control parameters in accordance with subdivision C 1 g of this section and continue to conduct lead and copper tap and water quality parameter sampling in accordance with 12 VAC 5-590-370 B 6 a (4) c and 12 VAC 5-590-370 B 6 b (4), respectively. The waterworks owner shall provide the district engineer with the following information in order to support a determination under this paragraph:

(a) The results of all test samples collected for each of the water quality parameters in subdivision C 1 c (3) of this section.

(b) A report explaining the test methods used by the waterworks owner to evaluate the corrosion control treatments listed in subdivision C 1 c (1) of this section, the results of all tests conducted, and the basis for the owner's selection of optimal corrosion control treatment;

(c) A report explaining how corrosion control has been installed and how it is being maintained to insure minimal lead and copper concentrations at consumers' taps; and

(d) The results of tap water samples collected in accordance with 12 VAC 5-590-370 B 6 a at least once every six months for one year after corrosion control has been installed.

(3) Any waterworks is deemed to have optimized corrosion control if the owner submits results of tap water monitoring conducted in accordance with 12 VAC 5-590-370 B 6 a and source water monitoring conducted in accordance with 12 VAC 5-590-370 B 6 c that demonstrates for two

consecutive six-month monitoring periods that the difference between the 90th percentile tap water lead level computed under 12 VAC 5-590-410 E, and the highest source water lead concentration, is less than the P Q L for lead (0.005 mg/L).

(a) Any waterworks owner that submits monitoring results indicating that the highest source water lead level is below the Method Detection Limit may also be deemed to have optimized corrosion control under this paragraph if the 90th percentile tap water lead level is less than or equal to the PQL for lead for two consecutive six-month monitoring periods.

(b) Any waterworks owner deemed to have optimized corrosion control under this paragraph shall continue monitoring for lead and copper at the tap no less frequently than once every three calendar years using the reduced number of sites specified in 12 VAC 5-590-370 B 6 a (3) and collecting the samples at times and locations specified in 12 VAC 5-590-370 B 6 a (4) (d) (iv). Any such waterworks owner that has not conducted a round of monitoring pursuant to 12 VAC 5-590-370 B 6 a (4) Since September 30, 1997, shall complete a round of monitoring pursuant to this paragraph no later than September 30, 2000.

(c) Any waterworks owner deemed to have optimized corrosion control pursuant to this paragraph shall notify the district engineer in writing pursuant to 12 VAC 5-590-530 D 1 c of any change in treatment or the addition of a new water source. The commissioner may require the owner of any such waterworks to conduct additional monitoring or to take other actions the commissioner deems appropriate to ensure that minimum levels of corrosion control are being maintained in the distribution system.

(d) As of July 12, 2001, a waterworks owner is not deemed to have optimized corrosion control under this paragraph, and shall implement corrosion control treatment specified in subdivision C 2 b (3) e of this section unless the copper action level is met.

(e) Any waterworks owner triggered into corrosion control because the waterworks no longer is deemed to have optimized corrosion control under this paragraph shall implement corrosion control treatment in accordance with the deadlines in subdivision C 2 e of this section. The owner of any such large waterworks shall adhere to the schedule specified in that paragraph for medium-size systems, with the time period for completing each step being triggered by the date the waterworks owner is no longer deemed to have optimized corrosion control treatment under this paragraph.

c. The owner of any small or medium-size waterworks that is required to

complete the corrosion control steps due to the exceedance of the lead or copper action level may cease completing the treatment steps whenever the waterworks meets both action levels during each of two consecutive monitoring periods conducted pursuant to 12 VAC 5-590-370 B 6 a and submits the results to the field office. If any such waterworks thereafter exceeds the lead or copper action level during any monitoring period, the owner shall recommence completion of the applicable treatment steps, beginning with the first treatment step which was not previously completed in its entirety. The commissioner may require the owner to repeat treatment steps previously completed where the commissioner determines that this is necessary to properly implement the treatment requirements of this section. The commissioner shall notify the owner in writing of such a determination and explain the basis for its decision. The requirement for the owner of any small- or medium-sized waterworks to implement corrosion control treatment steps in accordance with subdivision 2 e of this subsection (including waterworks deemed to have optimized corrosion control under subdivision 2 b (1) of this subsection) is triggered whenever any small- or medium-sized waterworks exceeds the lead or copper action level.

d. Treatment steps and deadlines for large waterworks. Except as provided in subdivisions C 2 b (2) and (3) of this section, owners of large waterworks shall complete the following corrosion control treatment steps (described in the referenced portions of subdivision C 1 of this section, 12 VAC 5-590-370 B 6 a and b) by the indicated dates.

(1) Step 1: The waterworks owner shall conduct initial monitoring (12 VAC 5-590-370 B 6 a (4) (a) and B 6 b (2)) during two consecutive six-month monitoring periods by January 1, 1993.

(2) Step 2: The waterworks owner shall complete corrosion control studies (12 VAC 5-590-420 C 1 c) and submit the study and recommendations to the commissioner (12 VAC 5-590-200) by July 1, 1994.

(3) Step 3: The commissioner shall approve optimal corrosion control treatment (12 VAC 5-590-420 C 1 d) by January 1, 1995.

(4) Step 4: The waterworks owner shall install optimal corrosion control treatment (12 VAC 5-590-420 C 1 e) by January 1, 1997.

(5) Step 5: The waterworks owner shall complete follow-up sampling (12 VAC 5-590-370 B 6 a (4) (b) and B 6 b (3)) by January 1, 1998.

(6) Step 6: The commissioner shall review installation of treatment and designate optimal water quality control parameters (12 VAC 5-590-420 C 1 f) by July 1, 1998.

(7) Step 7: The waterworks owner shall operate the waterworks in compliance with the commissioner-specified optimal water quality control parameters (12 VAC 5-590-420 C 1 g) and continue to conduct tap

sampling (12 VAC 5-590-370 B 6 a (4) (c) and B 6 b (4)).

e. Treatment steps and deadlines for small and medium-size waterworks. Except as provided in 12 VAC 5-590-420 C 2 b, owners of small- and medium-size waterworks shall complete the following corrosion control treatment steps (described in the referenced portions of 12 VAC 5-590-420 C 1, 12 VAC 5-590-370 B 6 a and b) by the indicated time periods.

(1) Step 1: The waterworks owner shall conduct initial tap sampling (12 VAC 5-590-370 B 6 a (4) (a) and B 6 b (2)) until the waterworks either exceeds the lead or copper action level or becomes eligible for reduced monitoring under 12 VAC 5-590-370 B 6 a (4) (d). The owner of a waterworks exceeding the lead or copper action level shall propose optimal corrosion control treatment (12 VAC 5-590-420 C 1 a) within six months after it exceeds one of the action levels.

(2) Step 2: Within 12 months after a waterworks exceeds the lead or copper action level, the commissioner may require the waterworks owner to perform corrosion control studies (12 VAC 5-590-420 C 1 b). If the commissioner does not require the owner to perform such studies, the commissioner shall specify optimal corrosion control treatment (12 VAC 5-590-420 C 1 d) within the following timeframes:

(a) For medium-size waterworks, within 18 months after such waterworks exceeds the lead or copper action level;

(b) For small waterworks, within 24 months after such waterworks exceeds the lead or copper action level.

(3) Step 3: If the commissioner requires a waterworks owner to perform corrosion control studies under Step 2, the waterworks owner shall complete the studies (12 VAC 5-590-420 C 1 c) and submit the study and recommendations to the commissioner (12 VAC 5-590-200) within 18 months after the commissioner requires that such studies be conducted.

(4) Step 4: If the waterworks has performed corrosion control studies under Step 2, the commissioner shall designate optimal corrosion control treatment (12 VAC 5-590-420 C 1 d) within six months after completion of Step 3.

(5) Step 5: The waterworks shall install optimal corrosion control treatment (12 VAC 5-590-420 C 1 e) within 24 months after the commissioner designates such treatment.

(6) Step 6: The waterworks owner shall complete follow-up sampling (12 VAC 5-590-370 B 6 a (4) (b) and B 6 b (3)) within 36 months after the commissioner designates optimal corrosion control treatment.

(7) Step 7: The commissioner shall review the waterworks owner's installation of treatment and designate optimal water quality control

parameters (12 VAC 5-590-420 C 1 f) within six months after completion of Step 6.

(8) Step 8: The waterworks owner shall operate in compliance with the commissioner designated optimal water quality control parameters (12 VAC 5-590-420 C 1 g) and continue to conduct tap sampling (12 VAC 5-590-370 B 6 a (4) (c) and B 6 b (4)).

D. Water supply (source water) treatment requirements for lead and copper. The owner of any waterworks exceeding the lead or copper action level shall complete the applicable water supply monitoring and treatment requirements (described in the referenced portions of subdivision D 2 of this section, and in 12 VAC 5-590-370 B 6 a and c) by the following deadlines.

1. Deadlines for completing water supply treatment steps.

a. Step 1: The owner of a waterworks exceeding the lead or copper action level shall complete lead and copper water supply monitoring (12 VAC 5-590-370 B 6 c (2)) and make a treatment proposal to the appropriate field office within six months after exceeding the lead or copper action level.

b. Step 2: The commissioner shall make a determination regarding the need for water supply treatment (12 VAC 5-590-420 D 2 b) within six months after submission of monitoring results under Step 1.

c. Step 3: If the commissioner requires installation of water supply treatment, the waterworks owner shall install the treatment (12 VAC 5-590-420 D 3) within 24 months after completion of Step 2.

d. Step 4: The waterworks owner shall complete follow-up tap water monitoring (12 VAC 5-590-370 B 6 a (4) (b)) and water supply lead and copper monitoring (12 VAC 5-590-370 B 6 c (3)) within 36 months after completion of Step 2.

e. Step 5: The commissioner shall review the waterworks owner's installation and operation of water supply treatment and specify maximum permissible water supply lead and copper levels (12 VAC 5-590-420 D 4) within six months after completion of Step 4.

f. Step 6: The waterworks owner shall operate in compliance with the commissioner-specified maximum permissible lead and copper water supply levels (12 VAC 5-590-420 D 4) and continue water supply monitoring (12 VAC 5-590-370 B 6 c (4) (a)).

2. Description of water supply treatment requirements.

a. Waterworks treatment recommendation. The owner of any waterworks which exceeds the lead or copper action level shall propose in writing to the appropriate field office, the installation and operation of one of the water supply treatments listed in subdivision D 2 b of this section. An owner may

propose that no treatment be installed based upon a demonstration that water supply treatment is not necessary to minimize lead and copper levels at users' taps.

b. Commissioner's determination regarding water supply treatment. The commissioner shall complete an evaluation of the results of all water supply samples submitted by the waterworks owner to determine whether water supply treatment is necessary to minimize lead or copper levels in water delivered to users' taps. If the division determines that treatment is needed, the commissioner shall either require installation and operation of the water supply treatment recommended by the waterworks (if any) or require the installation and operation of another water supply treatment from among the following: ion exchange, reverse osmosis, lime softening or coagulation/filtration. If the commissioner requests additional information to aid in the review, the waterworks shall provide the information by the date specified by the commissioner in the request. The commissioner shall notify the waterworks in writing of the determination and set forth the basis for the decision.

3. Installation of water supply treatment. Each waterworks owner shall properly install and operate the water supply treatment designated by the commissioner under subdivision D 2 b of this section.

4. Commissioner's review of water supply treatment and specification of maximum permissible water supply lead and copper levels. The commissioner shall review the water supply samples taken by the waterworks owner both before and after the waterworks owner installs water supply treatment, and determine whether the owner has properly installed and operated the water supply treatment designated by the commissioner. Based upon the review, the commissioner shall designate the maximum permissible lead and copper concentrations for finished water entering the distribution system. Such levels shall reflect the contaminant removal capability of the treatment properly operated and maintained. The commissioner shall notify the owner in writing and explain the basis for the decision.

5. Continued operation and maintenance. Each waterworks shall be operated to maintain lead and copper levels below the maximum permissible concentrations designated by the commissioner at each sampling point monitored in accordance with 12 VAC 5-590-370 B 6 c. The waterworks is out of compliance with this subdivision if the level of lead or copper at any sampling point is greater than the maximum permissible concentration designated by the commissioner.

6. Modification of the commissioner's treatment decisions. Upon his own initiative or in response to a request by a waterworks owner or other interested party, the commissioner may modify its determination of the water supply treatment under D 2 b of this section, or may modify the maximum permissible lead and copper concentrations for finished water entering the distribution system under

subdivision D 4 of this section. A request for modification by an owner or other interested party shall be in writing, explain why the modification is appropriate, and provide supporting documentation. The commissioner may modify the determination where he concludes that such change is necessary to ensure that the waterworks continues to minimize lead and copper concentrations in water supplies. A revised determination shall be made in writing, set forth the new treatment requirements, explain the basis for the commissioner's decision, and provide an implementation schedule for completing the treatment modifications.

E. Lead service line replacement requirements.

1. Owners of waterworks that fail to meet the lead action level in tap samples taken pursuant to 12 VAC 5-590-370 B 6 a (4) (b), after installing corrosion control and/or water supply treatment (whichever sampling occurs later), shall replace lead service lines in accordance with the requirements of this section. If a waterworks is in violation of subdivision C 2 of this section or subsection D of this section for failure to install water supply or corrosion control treatment, the commissioner may require the owner to commence lead service line replacement under this section after the date by which the owner was required to conduct monitoring under 12 VAC 5-590-370 B 6 a (4) (b) has passed.

2. A waterworks owner shall replace annually at least 7.0% of the initial number of lead service lines in its distribution system. The initial number of lead service lines is the number of lead lines in place at the time the replacement program begins. The waterworks owner shall identify the initial number of lead service lines in its distribution system, including an identification of the portion or portions owned by the waterworks, based upon a materials evaluation, including the evaluation required under 12 VAC 5-590-370 B 6 a (1) (a) and relevant authorities (e.g., contracts, local ordinances) regarding the portion owned by the waterworks. The first year of lead service line replacement shall begin on the date the action level was exceeded in tap sampling referenced in subdivision E 1 of this section.

3. A waterworks owner is not required to replace an individual lead service line if the lead concentration in all service line samples from that line, taken pursuant to 12 VAC 5-590-370 B 6 a (2) (c), is less than or equal to 0.015 mg/L.

4. A waterworks owner shall replace that portion of the lead service line that is owned by the waterworks. In cases where the waterworks owner does not own the entire lead service line, the waterworks owner shall notify the building owner, or the building owner's authorized agent, that the waterworks owner will replace that portion of the service line that is owned by the waterworks and shall offer to replace the building owner's portion of the line. The waterworks owner is not required to bear the cost of replacing the building owner's portion of the service line, nor is the waterworks owner required to replace the building owner's portion where the waterworks owner chooses not to pay the cost of replacing the building owner's portion of the line, or where replacing the building owner's

portion would be precluded by state, local or common law. A waterworks owner that does not replace the entire length of the service line also shall complete the following tasks.

a. At least 45 days prior to commencing with the partial replacement of a lead service line, the waterworks owner shall provide notice to the resident or residents of all buildings served by the line explaining that they may experience a temporary increase of lead levels in their drinking water, along with guidance on measures consumers can take to minimize their exposure to lead. The commissioner may allow the waterworks owner to provide notice under the previous sentence less that 45 days prior to commencing partial lead service line replacement where such replacement is in conjunction with emergency repairs. In addition, the waterworks owner shall inform the resident or residents served by the line that the waterworks owner will, at the waterworks owner's expense, collect a sample from each partially-replaced lead service line that is representative of the water in the service line for analysis of lead content, as prescribed in 12 VAC 5-590-370 B 6 a (2) (c), within 72 hours after the completion of the partial replacement of the lead service line. The waterworks owner shall collect the sample and report the results of the analysis to the building owner and resident or residents served by the line within three business days of receiving the results. Mailed notices post-marked within three business days of receiving the results shall be considered "on time."

b. The waterworks owner shall provide the information required by subdivision E 4 a of this section to the residents of individual dwellings by mail or by other methods approved by the commissioner. In instances where multi-family dwellings are served by the line, the waterworks owner shall have the option to post the information at a conspicuous location.

5. The commissioner shall require a waterworks owner to replace lead service lines on a shorter schedule than that required by this section, taking into account the number of lead service lines in the waterworks, where such a shorter replacement schedule is feasible. The commissioner shall make this determination in writing and notify the owner of the findings within 6 months after the waterworks is triggered into lead service line replacement based on monitoring referenced in subdivision E 1 of this section.

6. Any waterworks owner may cease replacing lead service lines whenever first draw tap samples collected pursuant to 12 VAC 5-590-370 B 6 a (2) (b) meet the lead action level during each of two consecutive monitoring periods and the owner submits the results to the appropriate district engineer. If the first draw tap samples collected in any such waterworks thereafter exceeds the lead action level, the owner shall recommence replacing lead service lines, pursuant to subdivision E 2 of this section.

7. To demonstrate compliance with subdivisions E 1 through E 4 of this section, a

waterworks owner shall report to the appropriate field office the information specified in 12 VAC 5-590-530 D 5.

F. Lead public education requirements. The owner of a waterworks that exceeds the lead action level based on tap water samples collected in accordance with 12 VAC 5-590-370 B 6 a shall deliver the public education materials contained in subdivisions F 1 and 2 of this section in accordance with the requirements in subdivision F 3 of this section.

1. Content of written public education materials. A waterworks owner shall include the following text in all of the printed materials distributed through the lead public education program.

a. Community waterworks. The owner of a community waterworks shall include the following text in all of the printed materials it distributes through the lead public education program. Waterworks owners may delete information pertaining to lead service line replacement, upon approval by the commissioner, if no lead service lines exist anywhere in the waterworks service area. Public education language in subdivisions F 1 a (4) (b) (v) and F 1 a (4) (d) (ii) of this section may be modified regarding building permit record availability and consumer access to these records, if approved by the commissioner. Waterworks owners may also continue to utilize pre-printed materials that meet the public education language requirements in 40 CFR 141.85, effective November 6, 1991, and contained in the 40 CFR Parts 100 to 149, edition revised as of July 1, 1991. Any additional information presented by a waterworks owner shall be consistent with the information below and be in plain English that can be understood by lay people.

(1) Introduction. The United States Environmental Protection Agency (EPA) and (insert name of waterworks) are concerned about lead in your drinking water. Although most homes have very low levels of lead in their drinking water, some homes in the community have lead levels above the EPA action level of 15 parts per billion (ppb), or 0.015 milligrams of lead per liter of water (mg/L). Under Federal law we are required to have a program in place to minimize lead in your drinking water by (insert date when corrosion control will be completed for your waterworks). This program includes corrosion control treatment, source water treatment, and public education. We are also required to replace the portion of each lead service line that we own if the line contributes lead concentrations of more than 15 ppb after we have completed the comprehensive treatment program. If you have any questions about how we are carrying out the requirements of the lead regulation please give us a call at (insert waterworks phone number). This brochure explains the simple steps you can take to protect you and your family by reducing your exposure to lead in drinking water.

(2) Health effects of lead. Lead is a common metal found throughout the

environment in lead-based paint, air, soil, household dust, food, certain types of pottery porcelain and pewter, and water. Lead can pose a significant risk to your health if too much of it enters your body. Lead builds up in the body over many years and can cause damage to the brain, red blood cells and kidneys. The greatest risk is to young children and pregnant women. Amounts of lead that will not hurt adults can slow down normal mental and physical development of growing bodies. In addition, a child at play often comes into contact with sources of lead contamination like dirt and dust that rarely affect an adult. It is important to wash children's hands and toys often, and to try to make sure they only put food in their mouths.

(3) Lead in drinking water.

(a) Lead in drinking water, although rarely the sole cause of lead poisoning, can significantly increase a person's total lead exposure, particularly the exposure of infants who drink baby formulas and concentrated juices that are mixed with water. The EPA estimates that drinking water can make up 20% or more of a person's total exposure to lead.

(b) Lead is unusual among drinking water contaminants in that it seldom occurs naturally in water supplies like rivers and lakes. Lead enters drinking water primarily as a result of the corrosion, or wearing away, of materials containing lead in the water distribution system and household plumbing. These materials include lead-based solder used to join copper pipe, brass and chrome plated brass faucets, and in some cases, pipes made of lead that connect your house to the water main (service lines). In 1986, Congress banned the use of lead solder containing greater than 0.2% lead, and restricted the lead content of faucets, pipes and other plumbing materials to 8.0%.

(c) When water stands in lead pipes or plumbing systems containing lead for several hours or more, the lead may dissolve into your drinking water. This means the first water drawn from the tap in the morning, or later in the afternoon after returning from work or school, can contain fairly high levels of lead.

(4) Steps you can take in the home to reduce exposure to lead in drinking water.

(a) Despite our best efforts mentioned earlier to control water corrosivity and remove lead from the water supply, lead levels in some homes or buildings can be high. To find out whether you need to take action in your own home, have your drinking water tested to determine if it contains excessive concentrations of lead. Testing the water is essential because you cannot see, taste, or smell lead in drinking

water. Some local laboratories that can provide this service are listed at the end of this booklet. (The waterworks owners should contact the Division of Consolidated Laboratory Services at (804) 786-3411 for a list of certified laboratories in their area). For more information on having your water tested, please call (insert phone number of waterworks).

(b) If a water test indicates that the drinking water drawn from a tap in your home contains lead above 15 ppb, then you should take the following precautions:

(i) Let the water run from the tap before using it for drinking or cooking any time the water in a faucet has gone unused for more than six hours. The longer water resides in your home's plumbing the more lead it may contain. Flushing the tap means running the cold water faucet until the water gets noticeably colder, usually about 15-30 seconds. If your house has a lead service line to the water main, you may have to flush the water for a longer time, perhaps one minute, before drinking. Although toilet flushing or showering flushes water through a portion of your home's plumbing system, you still need to flush the water in each faucet before using it for drinking or cooking. Flushing tap water is a simple and inexpensive measure you can take to protect your family's health. It usually uses less than one or two gallons of water and costs less than (insert a cost estimate based on flushing two times a day for 30 days) per month. To conserve water, fill a couple of bottles for drinking water after flushing the tap, and whenever possible use the first flush water to wash the dishes or water the plants. If you live in a high-rise building, letting the water flow before using it may not work to lessen your risk from lead. The plumbing systems have more, and sometimes larger pipes than smaller buildings. Ask your landlord for help in locating the source of the lead and for advice on reducing the lead level.

(ii) Try not to cook with, or drink water from the hot water tap. Hot water can dissolve more lead more quickly than cold water. If you need hot water, draw water from the cold tap and heat it on the stove or microwave.

(iii) Remove loose lead solder and debris from the plumbing materials installed in newly constructed homes, or homes in which the plumbing has recently been replaced, by removing the faucet strainers from all taps and running the water from three to five minutes. Thereafter, periodically remove the strainers and flush out any debris that has accumulated over time.

(iv) If your copper pipes are joined with lead solder that has been

installed illegally since it was banned in 1986, notify the plumber who did the work and request that he replace the lead solder with lead-free solder. Lead solder looks dull gray, and when scratched with a key looks shiny. In addition, notify the local building official in your city or county.

(v) Determine whether the service line that connects your home or apartment to the water main is made of lead. The best way to determine if your service line is made of lead is by either hiring a licensed plumber to inspect the line or by contacting the plumbing contractor who installed the line. You can identify the plumbing contractor by checking your localities' record of building permits which should be maintained in the files of the (insert name of department that issues building permits). A licensed plumber can at the same time check to see if your home's plumbing contains lead solder, lead pipes, or pipe fittings that contain lead. The waterworks that delivers water to your home should also maintain records of the materials located in the distribution system. If the service line that connects your dwelling to the water main contributes more than 15 ppb to drinking water, after our comprehensive treatment program is in place, we are required to replace the portion of the line we own. Since the line is only partially owned by the (insert the name of the city, county, or waterworks that owns the line), we are required to provide the owner of the privately-owned portion of the line with information on how to replace the privately-owned portion of the service line, and offer to replace that portion of the line at the line owner's expense. If we replace only the portion of the line that we own, we also are required to notify you in advance and provide you with information on the steps you can take to minimize exposure to any temporary increase in lead levels that may result from the partial replacement, to take a follow-up sample at our expense from the line within 72 hours after the partial replacement, and to mail or otherwise provide you with the results of that sample within three business days of receiving the results. Acceptable replacement alternatives include copper, steel, iron, and plastic pipes and must comply with local plumbing codes.

(vi) Have an electrician check your wiring. If grounding wires from the electrical system are attached to your pipes, corrosion may be greater. Check with a licensed electrician or your local electrical code to determine if your wiring can be grounded elsewhere. DO NOT attempt to change the wiring yourself because improper grounding can cause electrical shock and fire hazards.

(c) The steps described above will reduce the lead concentrations in your drinking water. However, if a water test indicates that the drinking

water coming from your tap contains lead concentrations in excess of 15 ppb after flushing, or after we have completed our actions to minimize lead levels, then you may want to take the following additional measures.

(i) Purchase or lease a home treatment device. Home treatment devices are limited in that each unit treats only the water that flows from the faucet to which it is connected, and all of the devices require periodic maintenance and replacement. Devices such as reverse osmosis systems or distillers can effectively remove lead from your drinking water. Some activated carbon filters may reduce lead levels at the tap, however all lead reduction claims should be investigated. Be sure to check the actual performance of a specific home treatment device before and after installing the unit.

(ii) Purchase bottled water for drinking and cooking.

(d) You can consult a variety of sources for additional information. Your family doctor or pediatrician can perform a blood test for lead and provide you with information about the health effects of lead. State and local government agencies that can be contacted include:

(i) (Insert the name of the waterworks) at (insert phone number) can provide you with information about your community's waterworks and a list of local laboratories that have been certified by Division of Consolidated Laboratory Services for testing water quality.

(ii) (Insert the name of city or county department that issues building permits) at (insert phone number) can provide you with information about building permit records that should contain the names of plumbing contractors that plumbed your home.

(iii) The Medical Director of (Insert the name of the city or county) Health Department, and the Virginia Department of Health Division of Child and Adolescent Health, Lead Safe Virginia Program Director at 1-877-668-7987 can provide you with information about the health effects of lead and how you can have your child's blood tested.

(e) The following is a list of some state-approved laboratories in your area that you can call to have your water tested for lead. (Insert names and phone numbers of at least two laboratories.)

b. Nontransient noncommunity waterworks. The owner of a nontransient noncommunity waterworks shall either include the text specified in subdivision F 1 a of this section or shall include the following text in all of the printed materials it distributes through its lead public education program. The waterworks owner may delete information pertaining to lead service lines

upon approval by the commissioner if no lead service lines exist anywhere in the waterworks service area. Any additional information presented by a waterworks owner shall be consistent with the information below and be in plain English that can be understood by lay people.

(1) Introduction. The United States Environmental Protection Agency (EPA) and (insert name of waterworks) are concerned about lead in your drinking water. Some drinking water samples taken from this facility have lead levels above the EPA action level of 15 parts per billion (ppb), or 0.015 milligrams of lead per liter (mg/L)of water. Under federal law we are required to have a program in place to minimize lead in your drinking water by (insert date when corrosion control will be completed for your waterworks). This program includes corrosion control treatment, water supply treatment, and public education. We are also required to replace the portion of each lead service line that we own if the line contributes lead concentrations of more than 15 ppb after we have completed the comprehensive treatment program. If you have any questions about how we are carrying out the requirements of the lead regulation, please give us a call at (insert waterworks phone number). This brochure explains the simple steps you can take to protect yourself by reducing your exposure to lead in drinking water.

(2) Health effects of lead. Lead is found throughout the environment in lead-based paint, air, soil, household dust, food, certain types of pottery, porcelain and pewter, and water. Lead can pose a significant risk to your health if too much of it enters your body. Lead builds up in the body over many years and can cause damage to the brain, red blood cells and kidneys. The greatest risk is to young children and pregnant women. Amounts of lead that won't hurt adults can slow down normal mental and physical development of growing bodies. In addition, a child at play often comes into contact with sources of lead contamination like dirt and dust that rarely affect an adult. It is important to wash children's hands and toys often, and to try to make sure they only put food in their mouths.

(3) Lead in drinking water.

(a) Lead in drinking water, although rarely the sole cause of lead poisoning, can significantly increase a person's total lead exposure, particularly the exposure of infants who drink baby formulas and concentrated juices that are mixed with water. The EPA estimates that drinking water can make up 20% or more of a person's total exposure to lead.

(b) Lead is unusual among drinking water contaminants in that it seldom occurs naturally in water supplies like rivers and lakes. Lead enters drinking water primarily as a result of the corrosion, or wearing away, of materials containing lead in the water distribution system and

household plumbing. These materials include lead-based solder used to join copper pipe, brass and chrome-plated brass faucets, and in some cases, pipes made of lead that connect houses and buildings to water mains (service lines). In 1986, Congress banned the use of lead solder containing greater than 0.2% lead, and restricted the lead content of faucets, pipes and other plumbing materials to 8.0%.

(c) When water stands in lead pipes or plumbing systems containing lead for several hours or more, the lead may dissolve into your drinking water. This means the first water drawn from the tap in the morning, or later in the afternoon if the water has not been used all day, can contain fairly high levels of lead.

(4) Steps you can take to reduce exposure to lead in drinking water.

(a) Let the water run from the tap before using it for drinking or cooking any time the water in a faucet has gone unused for more than six hours. The longer water resides in plumbing the more lead it may contain. Flushing the tap means running the cold water faucet for about 15 to 30 seconds. Although toilet flushing or showering flushes water through a portion of the plumbing system, you still need to flush the water in each faucet before using it for drinking or cooking. Flushing tap water is a simple and inexpensive measure you can take to protect your health. It usually uses less than one gallon of water.

(b) Do not cook with or drink water from the hot water tap. Hot water can dissolve more lead more quickly than cold water. If you need hot water, draw water from the cold tap and then heat it.

(c) The steps described above will reduce the lead concentrations in your drinking water. However, if you are still concerned, you may wish to use bottled water for drinking and cooking.

(d) You can consult a variety of sources for additional information. Your family doctor or pediatrician can perform a blood test for lead and provide you with information about the health effects of lead. State and local government agencies that can be contacted include:

(i) (Insert the name or title of facility official if appropriate) at (insert phone number) can provide you with information about your facility's water supply; and

(ii) The Medical Director of Insert the name of the city or county Health Department, and the Virginia Department of Health, Division of Child and Adolescent Health, Lead Safe Virginia Program Director at 1-877-668-7987 can provide you with information about the health effects of lead.

2. Content of broadcast materials. A waterworks owner shall include the following

information in all public service announcements submitted under the lead public education program to television and radio stations for broadcasting:

a. Why should everyone want to know the facts about lead and drinking water? Because unhealthy amounts of lead can enter drinking water through the plumbing in your home. That's why I urge you to do what I did. I had my water tested for (insert free or $ per sample). You can contact the (insert the name of the waterworks) for information on testing and on simple ways to reduce your exposure to lead in drinking water.

b. To have your water tested for lead, or to get more information about this public health concern, please call (insert the phone number of the waterworks).

3. Delivery of a public education program.

a. In communities where a significant proportion of the population speaks a language other than English, public education materials shall be communicated in the appropriate language(s).

b. The owner of a community waterworks that exceeds the lead action level on the basis of tap water samples collected in accordance with 12 VAC 5-590-370 B 6 a, and that is not already repeating public education tasks pursuant to subdivisions F 3 c, F 3 g, or F 3 h of this section, shall, within 60 days:

(1) Insert notices in each customer's water utility bill containing the information in subdivision F 1 of this section, along with the following alert on the water bill itself in large print: "SOME HOMES IN THIS COMMUNITY HAVE ELEVATED LEAD LEVELS IN THEIR DRINKING WATER. LEAD CAN POSE A SIGNIFICANT RISK TO YOUR HEALTH. PLEASE READ THE ENCLOSED NOTICE FOR FURTHER INFORMATION." The owner of a community waterworks having a billing cycle that does not include a billing within 60 days of exceeding the action level, or that cannot insert information in the water utility bill without making major changes to its billing system, may use a separate mailing to deliver the information in subdivision F 1 a of this section as long as the information is delivered to each customer within 60 days of exceeding the action level. The owner of such waterworks shall also include the "alert" language specified in this paragraph.

(2) Submit the information in subdivision F 1 of this section to the editorial departments of the major daily and weekly newspapers circulated throughout the community.

(3) Deliver pamphlets and/or brochures that contain the public education materials in subdivisions F 1 b and d of this section to facilities and organizations, including the following:

(a) Public schools and/or local school boards;

(b) City or county health department;

(c) Women, Infants, and Children and/or Head Start Program(s) whenever available;

(d) Public and private hospitals and/or clinics;

(e) Pediatricians;

(f) Family planning clinics; and

(g) Local welfare agencies.

(4) Submit the public service announcement in subdivision F 2 of this section to at least five of the radio and television stations with the largest audiences that broadcast to the community served by the waterworks.

c. The owner of a community waterworks shall repeat the tasks contained in subdivisions F 3 b (1), (2), and (3) of this section every 12 months, and the tasks contained in subdivision F 3 b (4) of this section every six months for as long as the waterworks exceeds the lead action level.

d. Within 60 days after it exceeds the lead action level (unless it already is repeating public education tasks pursuant to subdivision F 3 e of this section), the owner of a nontransient noncommunity waterworks shall deliver the public education materials contained in subdivisions F 1 a or the public education materials specified by subdivision F 1 b of this section as follows:

(1) Post informational posters on lead in drinking water in a public place or common area in each of the buildings served by the waterworks; and

(2) Distribute informational pamphlets and/or brochures on lead in drinking water to each person served by the nontransient noncommunity waterworks. The commissioner may allow the waterworks owner to utilize electronic transmission in lieu of or combined with printed materials as long as it achieves at least the same coverage.

e. The owner of a nontransient noncommunity waterworks shall repeat the tasks contained in subdivision F 3 d of this section at least once during each calendar year in which the waterworks exceeds the lead action level.

f. A waterworks owner may discontinue delivery of public education materials if the waterworks has met the lead action level during the most recent six-month monitoring period conducted pursuant to 12 VAC 5-590-370 B 6 a. The owner shall recommence public education in accordance with this section if the waterworks subsequently exceeds the lead action level during any monitoring period.

g. The owner of a community waterworks may apply to the district engineer, in writing, (unless the commissioner has waived the requirement for prior

approval) to use the text specified in subdivision F 1 b of this section in lieu of the text in subdivision F 1 a of this section and to perform the tasks listed in subdivisions F 3 d and F 3 e of this section in lieu of the tasks in subdivisions F 3 b and F 3 c of this section if:

(1) The waterworks serves a facility, such as a prison or a hospital, where the population served is not capable of or is prevented from making improvements to plumbing or installing point of use treatment devices; and

(2) The waterworks owner provides water as part of the cost of services provided and does not separately charge for water consumption.

h. The owner of a community water system serving 3,300 or fewer people may omit the task contained in subdivision F 3 b (4) of this section. As long as the owner distributes notices containing the information contained in subdivision F 1 a of this section to every household served by the waterworks, such waterworks owners may further limit their public education programs as follows:

(1) Waterworks serving 500 or fewer people may forego the task contained in subdivision F 3 b (2) of this section. Such a waterworks owner may limit the distribution of the public education materials required under subdivision F 3 b (3) of this section to facilities and organizations served by the waterworks that are most likely to be visited regularly by pregnant women and children, unless it is notified by the commissioner in writing that it must make a broader distribution.

(2) If approved by the commissioner in writing, a waterworks owner serving 501 to 3,300 people may omit the task in subdivision F 3 b (2) of this section and/or limit the distribution of the public education materials required under subdivision F 3 b (3) of this section to facilities and organizations served by the waterworks that are most likely to be visited regularly by pregnant women and children.

i. The owner of a community waterworks serving 3,300 or fewer people that delivers public education in accordance with subdivision F 3 h of this section shall repeat the required public education tasks at least once during each calendar year in which the waterworks exceeds the lead action level.

4. Supplemental monitoring and notification of results. The owner of a waterworks that fails to meet the lead action level on the basis of tap samples collected in accordance with 12 VAC 5-590-370 B 6 a shall offer to sample the tap water of any customer who requests it. The owner is not required to pay for collecting or analyzing the sample, nor is the owner required to collect and analyze the sample itself.

G. Beginning January 1, 1993, each waterworks owner shall certify annually in writing to the commissioner (using third party or manufacturer's certification) that, when polymers containing acrylamide or epichlorohydrin are used by the waterworks in

drinking water systems, the combination (or product) of dose and monomer level does not exceed the following specified levels: Acrylamide = 0.05% dosed at 1 ppm (or equivalent) of polymer. Epichlorohydrin = 0.01% dosed at 20 ppm (or equivalent) of polymer. Certifications may rely on manufacturers or third parties, as approved by the commissioner.

H. Treatment technique for control of disinfection byproduct (DBPP) precursors.

1. Applicability.

a. Waterworks that use surface water or groundwater under the direct influence of surface water using conventional filtration treatment must operate with enhanced coagulation or enhanced softening to achieve the TOC percent removal levels specified in subdivision H 2 of this section unless the waterworks meets at least one of the alternative compliance criteria listed in subdivision H 1 b or c of this section.

b. Alternative compliance criteria for enhanced coagulation and enhanced softening waterworks. Waterworks that use surface water or groundwater under the direct influence of surface water provided with conventional filtration treatment may use the alternative compliance criteria in subdivisions H 1 b (1) through (6) of this section to comply with this section in lieu of complying with subdivision H 2 of this section. Waterworks must still comply with monitoring requirements in 12 VAC 5-590-370 B 3 i.

(1) The waterworks' source water TOC level, measured according to 12 VAC 5-590-440, is less than 2.0 mg/L, calculated quarterly as a running annual average.

(2) The waterworks' treated water TOC level, measured according to 12 VAC 5-590-440, is less than 2.0 mg/L, calculated quarterly as a running annual average.

(3) The waterworks' source water TOC level, measured according to 12 VAC 5-590-440, is less than 4.0 mg/L, calculated quarterly as a running annual average; the source water alkalinity, measured according to 12 VAC 5-590-440, is greater than 60 mg/L (as CaCO sub3), calculated quarterly as a running annual average; and either the TTHM and HAA5 running annual averages are no greater than 0.040 mg/L and 0.030 mg/L, respectively; or prior to the effective date for compliance in 12 VAC 590-370 B 3 a, the waterworks has made a clear and irrevocable financial commitment not later than the effective date for compliance in 12 VAC 590-370 B 3 a to use of technologies that will limit the levels of TTHMs and HAA5 to no more than 0.040 mg/L and 0.030 mg/L, respectively. Waterworks must submit evidence of a clear and irrevocable financial commitment, in addition to a schedule containing milestones and periodic progress reports for installation and operation of appropriate technologies, to the commissioner for approval not later than the effective

date for compliance in 12 VAC 590-370 B 3 a. These technologies must be installed and operating not later than June 30, 2005. Failure to install and operate these technologies by the date in the approved schedule will constitute a violation of these regulations.

(4) The TTHM and HAA5 running annual averages are no greater than 0.040 mg/L and 0.030 mg/L, respectively, and the waterworks uses only chlorine for primary disinfection and maintenance of a residual in the distribution system.

(5) The waterworks' source water SUVA, prior to any treatment and measured monthly according to 12 VAC 5-590-440, is less than or equal to 2.0 L/mg-m, calculated quarterly as a running annual average.

(6) The waterworks' finished water SUVA, measured monthly according to 12 VAC 5-590-440, is less than or equal to 2.0 L/mg-m, calculated quarterly as a running annual average.

c. Additional alternative compliance criteria for softening waterworks. Waterworks practicing enhanced softening that cannot achieve the TOC removals required by subdivision H 2 b of this section may use the alternative compliance criteria in subdivisions H 1 c (1) and (2) of this section in lieu of complying with subdivision H 2 of this section. Waterworks must still comply with monitoring requirements in 12 VAC 5-590-370 B 3 i.

(1) Softening that results in lowering the treated water alkalinity to less than 60 mg/L (as $CaCO_3$), measured monthly according to 12 VAC 5-590-440 and calculated quarterly as a running annual average.

(2) Softening that results in removing at least 10 mg/L of magnesium hardness (as $CaCO_3$), measured monthly and calculated quarterly as an annual running average.

2. Enhanced coagulation and enhanced softening performance requirements.

a. Waterworks must achieve the percent reduction of TOC specified in subdivision H 2 b of this section between the source water and the combined filter effluent, unless the commissioner approves a waterworks' request for alternate minimum TOC removal (Step 2) requirements under subdivision H 2 c of this section.

b. Required Step 1 TOC reductions, indicated in the following table, are based upon specified source water parameters measured in accordance with 12 VAC 5-590-440. Waterworks practicing softening are required to meet the Step 1 TOC reductions in the far-right column (Source water alkalinity greater than 120 mg/L) for the specified source water TOC:

Step 1 Required Removal of TOC by Enhanced Coagulation and Enhanced Softening for Community or Nontransient Noncommunity Waterworks That Use Surface Water or Groundwater Under the Direct Influence of Surface

Water Using Conventional Treatment[1, 2]

Source-water TOC mg/L	Source-water alkalinity, mg/L as $CaCO_3$		
	0-60	>60-120	>120[3]
>2.0-4.0	35.0%	25.0%	15.0%
>4.0-8.0	45.0%	35.0%	25.0%
>8.0	50.0%	40.0%	30.0%

[1]Waterworks meeting at least one of the conditions in subdivisions H 1 b (1) through (6) of this section are not required to operate with enhanced coagulation.

[2]Softening waterworks meeting one of the alternative compliance criteria in subdivision H 1 c of this section are not required to operate with enhanced softening.

[3]Waterworks practicing softening must meet the TOC removal requirements in this column.

c. Waterworks that use surface water or groundwater under the direct influence of surface water with conventional treatment systems that cannot achieve the Step 1 TOC removals required by subdivision H 2 b of this section due to water quality parameters or operational constraints must apply to the commissioner, within three months of failure to achieve the TOC removals required by subdivision H 2 b of this section, for approval of alternative minimum TOC (Step 2) removal requirements submitted by the waterworks. If the commissioner approves the alternative minimum TOC removal (Step 2) requirements, the commissioner may make those requirements retroactive for the purposes of determining compliance. Until the commissioner approves the alternate minimum TOC removal (Step 2) requirements, the waterworks must meet the Step 1 TOC removals contained in subdivision H 2 b of this section.

d. Alternate minimum TOC removal (Step 2) requirements. Applications, made to the commissioner by waterworks using enhanced coagulation, for approval of alternative minimum TOC removal (Step 2) requirements under subdivision H 2 c of this section must include, at a minimum, results of bench- or pilot-scale testing conducted under subdivision H 2 d (1) of this section. The submitted bench- or pilot-scale testing must be used to determine the alternate enhanced coagulation level.

(1) Alternate enhanced coagulation level is defined as coagulation at a coagulant dose and pH as determined by the method described in subdivisions H 2 d (1) through (5) of this section such that an incremental addition of 10 mg/L of alum (or equivalent amount of ferric salt) results in a TOC removal of equal to or less than 0.3 mg/L. The percent removal of

TOC at this point on the "TOC removal versus coagulant dose" curve is then defined as the minimum TOC removal required for the waterworks. Once approved by the commissioner, this minimum requirement supersedes the minimum TOC removal required by the table in subdivision H 2 b of this section. This requirement will be effective until such time as the commissioner approves a new value based on the results of a new bench- and pilot-scale test. Failure to achieve the alternative minimum TOC removal levels set by the commissioner is a violation of these regulations.

(2) Bench- or pilot-scale testing of enhanced coagulation must be conducted by using representative water samples and adding 10 mg/L increments of alum (or equivalent amounts of ferric salt) until the pH is reduced to a level less than or equal to the enhanced coagulation Step 2 target pH shown in the following table:

Enhanced Coagulation Step 2 Target pH

Alkalinity (mg/L as $CaCO_3$)	Target pH
0-60	5.5
>60-120	6.3
>120-240	7.0
>240	7.5

(3) For waters with alkalinities of less than 60 mg/L for which addition of small amounts of alum or equivalent addition of iron coagulant drives the pH below 5.5 before significant TOC removal occurs, the waterworks must add necessary chemicals to maintain the pH between 5.3 and 5.7 in samples until the TOC removal of 0.3 mg/L per 10 mg/L alum added (or equivalent addition of iron coagulant) is reached.

(4) The waterworks may operate at any coagulant dose or pH necessary (consistent with other sections of these regulations) to achieve the minimum TOC percent removal approved under subdivision H 2 c of this section.

(5) If the TOC removal is consistently less than 0.3 mg/L of TOC per 10 mg/L of incremental alum dose at all dosages of alum (or equivalent addition of iron coagulant), the water is deemed to contain TOC not amenable to enhanced coagulation. The waterworks may then apply to the commissioner for a waiver of enhanced coagulation requirements.

3. Compliance calculations.

a. Waterworks that use surface water or groundwater under the direct influence of surface water other than those identified in subdivision H 1 b or H

1 c of this section must comply with requirements contained in subdivision H 2 b or H 2 c of this section. Waterworks must calculate compliance quarterly, beginning after the waterworks has collected 12 months of data, by determining an annual average using the following method:

(1) Determine actual monthly TOC percent removal, equal to:

(1-(treated water TOC/source water TOC))X100

(2) Determine the required monthly TOC percent removal (from either the table in subdivision H 2 b of this section or from subdivision H 2 c of this section).

(3) Divide the value in subdivision H 3 a (1) of this section by the value in subdivision H 3 a (2) of this section.

(4) Add together the results of subdivision H 3 a (3) of this section for the last 12 months and divide by 12.

(5) If the value calculated in subdivision H 3 a (4) of this section is less than 1.00, the waterworks is not in compliance with the TOC percent removal requirements.

b. Waterworks may use the provisions in subdivisions H 3 b (1) through (5) of this section in lieu of the calculations in subdivisions H 3 a (1) through (5) of this section to determine compliance with TOC percent removal requirements.

(1) In any month that the waterworks' treated or source water TOC level, measured according to 12 VAC 5-590-440, is less than 2.0 mg/L, the waterworks may assign a monthly value of 1.0 (in lieu of the value calculated in subdivision H 3 a (3) of this section) when calculating compliance under the provisions of subdivision H 3 a of this section.

(2) In any month that a waterworks practicing softening removes at least 10 mg/L of magnesium hardness (as $CaCO_3$), the waterworks may assign a monthly value of 1.0 (in lieu of the value calculated in subdivision H 3 a (3) of this section) when calculating compliance under the provisions of subdivision H 3 a of this section.

(3) In any month that the waterworks' source water SUVA, prior to any treatment and measured according to 12 VAC 5-590-440, is equal to or less than 2.0 L/mg-m, the waterworks may assign a monthly value of 1.0 (in lieu of the value calculated in subdivision H 3 a (3) of this section) when calculating compliance under the provisions of subdivision H 3 a of this section.

(4) In any month that the waterworks' finished water SUVA, measured according to 12 VAC 5-590-440, is equal to or less than 2.0 L/mg-m, the waterworks may assign a monthly value of 1.0 (in lieu of the value calculated in subdivision H 3 a (3) of this section) when calculating

compliance under the provisions of subdivision H 3 a of this section.

(5) In any month that a waterworks practicing enhanced softening lowers alkalinity below 60 mg/L (as $CaCO_3$), the waterworks may assign a monthly value of 1.0 (in lieu of the value calculated in subdivision H 3 a (3) of this section) when calculating compliance under the provisions of subdivision H 3 a of this section.

c. Waterworks that use surface water or groundwater under the direct influence of surface water and using conventional treatment may also comply with the requirements of this section by meeting the criteria in subdivision H 1 b or c of this section.

4. Enhanced coagulation or enhanced softening is the treatment technique required to control the level of DBP precursors in drinking water treatment and distribution systems for waterworks using surface water or groundwater under the direct influence of surface water and using conventional treatment.

I. The best technology, treatment techniques, or other means available for achieving compliance with the maximum contaminant levels for disinfection byproducts show in Table 2.13 are listed below:

1. Enhanced coagulation or enhanced softening or GAC10, with chlorine as the primary and residual disinfectant is the best available technology for achieving compliance with the maximum contaminant level for TTHM or HAA5.

2. Control of ozone treatment process to reduce production of bromate is the best available technology for achieving compliance with the maximum contaminant level for bromate.

3. Control of treatment processes to reduce disinfectant demand and control of disinfection treatment processes to reduce disinfectant levels is the best available technology for achieving compliance with the maximum contaminant level for chlorite.

J. The best technology, treatment techniques, or other means available for achieving compliance with the maximum residual disinfectant levels identified in Table 2.12 is the control of treatment processes to reduce disinfectant demand and control of disinfection treatment processes to reduce disinfectant levels.

K. If spent filter backwash water, thickener supernatant, or liquids from dewatering processes are recycled, in any waterworks supplied by a surface water source and waterworks supplied by a groundwater source under the direct influence of surface water that employ conventional filtration or direct filtration treatment, then they are subject to the recycle treatment technique requirement. Under this requirement recycle flows must be returned through all the processes of the treatment system, or an alternative location approved by the state, by June 8, 2004.

12 VAC 5-590-430. Determination of surface water influence of groundwater sources.

All waterworks' groundwater sources utilized by waterworks such as wells, springs, and infiltration galleries shall be evaluated by the division to determine surface water influence. The waterworks owner shall provide to the division all necessary information to make this determination in accordance with the following three-step procedure. The source shall be subjected to all criteria in a stepwise fashion. Once a determination with regard to surface water influence has been made it is not necessary to continue to the next step:

1. Step one - source history.

   a. The source is not surface influenced if the division has previously determined that disinfection treatment is not required (see 12 VAC 5-590-380 H).

   b. The source is surface influenced if it has been directly associated with a biological waterborn disease outbreak such a Giardiasis, or if it has been directly associated with chemical contamination from the surface.

   c. For all sources consisting of a spring, infiltration gallery, wells located in Karstian geology, or not classified as either 12 VAC 5-590-430 A 1 or 2 the determination shall proceed to step two.

2. Step two - source physiology and geology.

   a. The source is not surface influenced if it consists of a properly constructed Class I or Class II well in non-Karstain geologic provinces of the state, with no history of turbidity fluctuations, and that have been determined by the division to be adequately treated by disinfection alone (12 VAC 5-590-380 H).

   b. The source is surface influenced if a sanitary survey reveals that surface water may directly enter the source either through structural defects or through nearby surface water bodies, sinkholes, troughs, drainage ways, or other suspect geological features.

   c. The determination for sources consisting of a spring, infiltration gallery, wells located in Karstian geology or otherwise not classified under 12 VAC 5-590-430 B 1 or 2 shall proceed to step three.

3. Step three - water quality.

   a. The source is not surface influenced if the total coliform concentrations of the raw water as measured by the multiple-portion decimal-dilution (MPN) method is less than 100 organisms/100 mL based on a geometric mean of 20 or more samples over a period of six months with no more than 10% of these samples exceeding 100 organisms/100 mL; and having no record or confirmed fecal coliform contamination.

   b. The source is surface influenced if:

      (1) The source turbidity, temperature, pH, or conductivity fluctuate following climatic events or fluctuate relative to nearby surface bodies of

water, or

(2) The source exhibits the presence of diatoms, rotifers, coccidia, plant debris, insect parts, or Giardia cysts as identified by particulate analysis.

12 VAC 5-590-440. Analytical methods.

Analytical methods to determine compliance with the requirements of this chapter shall be those specified in the applicable edition of "Standard Methods for the Examination of Water and Wastewater," published by the American Public Health Association, the American Water Works Association, and the Water Pollution Control Federation; "Methods for Chemical Analysis of Water and Wastes," Environmental Protection Agency, Office of Technology Transfer, Washington, D.C. 20460, 1974; and "Methods for the Determination of Organic Compounds in Finished Drinking Water and Raw Source Water" (Sept 1986), EPA, Environmental Monitoring and Support Laboratory, Cincinnati, OH 45268 or in the case of primary maximum contaminant levels and lead and copper action levels, those methods shall be followed by the Division of Consolidated Laboratory Services and consistent with current U.S. Environmental Protection Agency regulations found at 40 CFR Part 141. All laboratories seeking certification to perform drinking water analyses must comply with 1 VAC 30-40 promulgated by the Department of General Services, Division of Consolidated Laboratory Services.

Table 2.2
Inorganic Chemicals.

Substance	Primary Maximum Contaminant Level (mg/L)
Antimony	0.006
Arsenic (As)	0.05
Asbestos	7 Million Fibers/Liter (longer than 10 um)
Barium (Ba)	2
Beryllium	0.004
Cadium (Cd)	0.005
Chromium (Cr)	0.1
Cyanide (as free Cyanide)	0.2
Fluoride (F)	4.0 #
Mercury (Hg)	0.002
Nickel	0.1
Nitrate (as N)	10 **
Nitrite (as N)	1
Total Nitrate and Nitrite (as N)	10
Selenium (Se)	0.05
Thallium	0.002

Substance	Secondary Maximum Contaminant Level (mg/L)
Chloride (Cl)	250.0
Corrosivity	Non-Corrosive, See Appendix B
Fluoride	2.0
Foaming Agents	0.5 *
Iron (Fe)	0.3
Manganese (Mn)	0.05
Sodium (Na)	No Limits Designated
Sulfate (SO_4)	250.0
Zinc (Zn)	5.0
Substance	Action Level (mg/L)
Lead (Pb)	0.015
Copper (Cu)	1.3

Note. For artificially fluoridated waterworks the minimum concentration of fluoride should be 0.8 mg/L and the maximum should be 1.0 mg/L. The optimum control limit is 0.9 mg/L. (See Appendix B)

* Note. Concentration reported in terms of Methylene Blue Active Substances.

** Note. See Appendix B for Exception Regarding Noncommunity Waterworks.

Table 2.3
Organic Chemicals.

Substance	Primary Maximum Contaminant Levels (mg/L)
VOC	
1. Vinyl Chloride	0.002
2. Benzene	0.005
3. Carbon Tetrachloride	0.005
4. 1,2-Dichloroethane	0.005
5. Trichloroethylene (TCE)	0.005
6. 1,1-Dichloroethylene	0.007
7. 1,1,1-Trichloroethane	0.2
8. para-Dichlorobenzene	0.075
9. cis-1,2-Dichloroethylene	0.07
10. 1,2-Dichloropropane	0.005
11. Ethylbenzene	0.7
12. Monochlorobenzene	0.1
13. o-Dichlorobenznen	0.6
14. Styrene	0.1
15. Tetrachloroethylene	0.005

16. Toluene	1
17. trans-1,2-Dichloroethylene	0.1
18. Xylene (total)	10
19. Dichloromethane	0.005
20. 1,2,4-Trichlorobenzene	0.07
21. 1,1,2-Trichloroethane	0.05
SOC	
1. Alachlor	0.002
2. Atrazine	0.003
3. Carbofuran	0.04
4. Chlordane	0.002
5. Heptachlor	0.0004
6. Heptachlor epoxide	0.0002
7. Polychlorinated biphenyls (PCBs)	0.0005
8. Dibromochloropropane (DBCP)	0.0002
9. Ethylene dibromide (EDB)	0.00005
10. Lindane	0.0002
11. Methoxychlor	0.04
12. Toxaphene	0.003
13. 2,4-Dichlorophenoxyacetic Acid (2,4-D)	0.07
14. 2,4,5-Trichlorophenoxypropionic Acid (2,4,5-TP or Silvex)	0.05
15. Reserved	
16. Reserved	
17. Reserved	
18. Pentachlorophenol	0.001
19. Benzo(a)pyrene	0.0002
20. Dalapon	0.2
21. Di(2-ethylhexy)adipate	0.4
22. Di(2-ethylhexy)phthalate	0.006
23. Dinoseb	0.007
24. Diquat	0.02
25. Endothall	0.1
26. Endrin	0.002
27. Glyphosate	0.7
28. Hexachlorobenzene	0.001
29. Hexachlorocyclopentadiene	0.05
30. Oxamyl (Vydate)	0.2
31. Picloram	0.5
32. Simazine	0.004
33. 2,3,7,8-TCDD (Dioxin)	3×10^{-8}

Table 2.4
Physical Quality.

Parameter	Maximum Contaminant Level	Concentration
Color	Secondary	15 Color Units
Odor	Secondary	3 Threshold odor numbers
pH	Secondary	6.5-8.5
Total Dissolved	Secondary	500 mg/L Solids (TDS)
Turbidity	Primary	*1 Turbidity Unit

* See Appendix B for operational requirements.

Table 2.5
Radiological Quality.

A. Maximum Contaminant Level Goals for Radionuclides	
SUBSTANCE	MCLG
1. Combined radium-226 and radium-228.	Zero
2. Gross alpha particle activity (excluding Radon and uranium).	Zero
3. Beta particle and photon radioactivity.	Zero
4. Uranium	Zero
B. Primary Maximum Contaminant Levels for Radionuclides	
SUBSTANCE	Primary Maximum Contaminant Level
a. Combined radium-226 and radium-228	5 pCi/L
b. Gross Alpha Activity (excluding Radon and Uranium)	15 pCi/L
c. Uranium	30 μg/L

Primary Maximum Contaminant Levels for Beta Particle and Photon Radioactivity from Man-Made Radionuclides

1. The average annual concentration of Beta particle and Photon radioactivity from man-made radionuclides in drinking water shall not produce an annual dose equivalent to the total body or any internal organ greater than 4 millirem/year.

2. Except for the radionuclides listed in Schedule I, the concentration of man-made radionuclides causing 4 MREM total body or organ dose equivalents

shall be calculated on the basis of a 2 liter per day drinking water intake using the 168-hour data listed in 'Maximum Permissible Body Burdens and Maximum Permissible Concentrations of Radionuclides in Air and Water for Occupational Exposure,' MBS Handbook 69 as amended August 1963, U.S. Department of Commerce. If two or more radionuclides are present, the sum of their annual dose equivalent to the total body or to any organ exceed 4 millirem/year.

Schedule 1 Average annual concentrations assumed to produce a total body organ dose of 4 mrem/year.		
Radionuclide	Critical Organ	pCi/liter
Tritium	Total Body	20,000
Strontium-90	Bone Marrow	8

* See Appendix B.

Table 2.6
Unregulated Contaminant Organics to be Monitored.

Group A	
1. Chloroform	12. Chloromethane
2. Bromodichloromethane	13. Bromoethane
3. Chlorodibromomethane	14. 1,2,3-Trichloropropane
4. Bromoform	15. 1,1,1,2-Tetrachloroethane
5. Chlorobenzene	16. Chloroethane
6. m-Dichlorobenzene	17. 2,2-Dichloropropane
7. Dibromomethane	18. o-Chlorotoluene
8. 1,1-Dichloropropene	19. p-Chlorotoluene
9. 1,1-Dichloroethane	20. Bromobenzene
10. 1,1,2,2-Tetrachloroethane	21. 1,3-Dichloropropene
11. 1,3-Dichloropropane	
Group B	
1. Aldrin	8. Metoachlor
2. Butachlor	9. Metribuzin
3. Carbaryl	10. Propachlor
4. Dicamba	11. Aldicarb
5. Dieldrin	12. Aldicarb sulfone
6. Methomyl	13. Aldicarb sulfoxide
7. 3-Hyposycarbofuran	

Table 2.7
Organic Chemical Monitoring Implementation Schedule Inorganics to be Monitored.

Sulfate

Table 2.8
Organic Chemical Monitoring Implementation Schedule.

Number of Persons Served	Monitoring to Begin During the Quarter that Begins
over 10,000	January 1, 1988
3,300 to 10,000	January 1, 1989
less than 3,300	January 1, 1991

Table 2.9
PMCL Effective Dates.

Table 2.3, Organics Chemicals, VOC 1 through 8 (Phase I)	January 9, 1989
Total Trihalomethanes and Fluoride	July 1, 1991
Table 2.3, Organics Chemicals, VOC 9 through 18 and SOC 1 through 14 (Phase II VOCs and SOCs)	July 30, 1992
Asbestos, Cadmium, Chromium, Mercury, Nitrate, Nitrite, Total Nitrate+Nitrite, Selenium (Phase II IOCs)	July 30,1992
Table 2.3, Organics Chemicals, SOC 15 through 18 and Table 2.2, Inorganic Chemicals, Barium (Phase II SOCs and IOCs)	January 1, 1993
Table 2.3, Organics Chemicals, VOC 19 through 21, SOC 19 through 33 and Table 2.2, Inorganic Chemicals; antimony, beryllium, cyanide (as free cyanide), nickel, and thallium	January 17, 1994
Uranium	December 8, 2003

Table 2.10
Maximum Contaminant Level Goals for Microbiological Contaminants.

Contaminant	MCLG
Giardia lamblia	zero
Viruses	zero
Legionella	zero
Total coliforms (including fecal	zero

coliforms and Escherichia coli)	
Cryptosporidium	zero

Table 2.11
Maximum Contaminant Level Goals for Disinfection Byproducts.

Disinfection byproduct	MCLG (mg/L)
Chloroform	Zero
Bromodichloromethane	Zero
Bromoform	Zero
Bromate	Zero
Dichloroacetic acid	Zero
Trichloroacetic acid	0.3
Chlorite	0.8
Dibromochloromethane	0.06

Table 2.12
Maximum Residual Disinfectant Level Goals (MRDLG) and Maximum Residual Disinfectant Levels (MRDL) for Disinfectants

Disinfectant residual	MRDLG(mg/L)	MRDL (mg/L)
Chlorine	4 (as Cl_2)	4.0 (as Cl_2)
Chloramines	4 (as Cl_2)	4.0 (as Cl_2)
Chlorine dioxide	0.8 (as ClO_2)	0.8 (as ClO_2)

Notwithstanding the MRDLs in Table 2.12, waterworks may increase residual disinfectant levels in the distribution system of chlorine or chloramines (but not chlorine dioxide) to a level and for a time necessary to protect public health, to address specific microbiological contamination problems caused by circumstances such as, but not limited to, distribution line breaks, storm run-off events, source water contamination events, or cross-connection events.

Table 2.13
Primary Maximum Contaminant Levels (PMCL) for Disinfection Byproducts

Disinfection byproduct	Current PMCL[1] (mg/L)	Future PMCL[2] (mg/L)
Total trihalomethanes (TTHM)	0.10	0.080
Haloacetic acids (five) (HAA5)		0.060
Bromate		0.010
Chlorite		1.0

[1]The primary maximum contaminant level (PMCL) of 0.10 mg/L for total trihalomethanes (the sum of the concentrations of bromodichloromethane, dibromochloromethane, tribromomethane (bromoform), and trichloromethane (chloroform)) applies to community waterworks using surface water or groundwater under the direct influence of surface water that serve a population of 10,000 people or more until December 31, 2001. This level applies to community waterworks that use only groundwater not under the direct influence of surface water and that serve a population of 10,000 people or more until December 31, 2003. Compliance with the primary maximum contaminant level for total trihalomethanes is calculated pursuant to 12 VAC 5-590-370 C 2 b (2) (a) (i). After December 31, 2003, this PMCL is no longer applicable.

[2]Community or nontransient noncommunity waterworks that use surface water or groundwater under the direct influence of surface water and serving 10,000 or more persons, must comply with this PMCL beginning January 1, 2002. Community or nontransient noncommunity waterworks that use surface water or groundwater under the direct influence of surface water serving fewer than 10,000 persons and waterworks using only groundwater not under the direct influence of surface water must comply with this PMCL beginning January 1, 2004.

Article 2. Operation of Waterworks.

12 VAC 5-590-450. General.

Waterworks operation comprises the constant operation and management of facilities and personnel. Consideration must be given to such factors as competent personnel, standards of water quality, plant maintenance and cleanliness, analytical laboratory control, operation and maintenance of plant equipment, plant records and safety. As the degree of complexity of water treatment increases, the expertise and skill required to produce a high quality water also increases.

12 VAC 5-590-460. Personnel.

The operation of waterworks, both small and large, must rest in the hands of qualified persons. The number of such employees in a waterworks system depends principally upon the size, the quality of the raw water, and the type of treatment processes used.

A. Waterworks operators designated by the waterworks owner to be in responsible charge must possess a valid waterworks operator license issued by the Board for Waterworks and Wastewater Works Operators, Department of Professional and Occupational Regulation, in accordance with that board's regulations (18 VAC 160-20-10 et seq.) and Chapters 1, 2, 3, and 23 of Title 54.1 of the Code of Virginia. The license must be of a classification equal to or higher than that of the waterworks. Additional operating personnel at the waterworks must also be licensed as specified below.

B. The number and class of operators in attendance and additional operating personnel are a minimum to meet the requirements of protection of the public health of the consumer and safety of the operating personnel. The classification of operators and additional operating personnel in attendance must conform with Table **(~~2.9~~ *2.14)***.

1. The owner shall designate one or more properly licensed operators to be in responsible charge of the waterworks at all times. When no designated operator is on duty or in communication with the operating personnel in attendance at the waterworks, a substitute operator shall be designated by the owner. The substitute operator shall possess a valid operator license of a classification equal to or greater than that of the waterworks.

2. All waterworks having design capacity of 2.0 mgd or higher and employing filtration must have a minimum of two operating personnel on duty whenever the plant is in operation. All other waterworks employing filtration must have a minimum of one operating person on duty whenever the plant is in operation.

3. Waterworks designed for softening only and utilizing chemical precipitation:

a. Waterworks having a design capacity of 2.0 mgd or higher must have a minimum of two operating personnel in attendance at all times the plant is in

operation; and

b. All other waterworks must have a minimum of one operator operating person in attendance at all times the treatment plant is in operation.

4. Waterworks utilizing iron and manganese removal by precipitation and having a design capacity of 0.5 mgd or higher must have a minimum of one operating person on duty at all times the treatment plant is in operation.

5. Waterworks providing treatment or no treatment and serving 400 or more persons and not previously covered will require daily attendance at each treatment facility by an operating person for sufficient time to insure proper operation of the facility and protection of the public health, as determined by the division.

TABLE ***(~~2.9~~ 2.14)***

MINIMUM CLASSIFICATION FOR WATERWORKS OPERATIONS ADDITIONAL OPERATING PERSONNEL

PLANT CLASSI-FICATION	PLANT CAPACITY ~~(MGC)~~ ***((MGD))***	EQUIVALENT POPULATION SERVED	TREATMENT	OPERATOR IN RESPONSIBLE CHARGE (CLASS)	SHIFT SUPERVISOR (CLASS)	OTHERS
CLASS I	15.0 or more	150,000	Conventional filtration or filter rate more than 2 gpm/ft^2	I	I	II,III,IV Trainee*
CLASS I	5.0 but less than 15.0	50,000 but less than 150,000	Conventional filtration filter rate more than 2 gpm/ft^2	I	II	II,III,IV Trainee*
CLASS II	Less than 5.0	Less than 50,000	Filtering rater greater than 2 gpm/ft^2	II	II	III, IV Trainee*
CLASS II	0.5 but less than 5.0	5,000 but less than 50,000	Conventional filtration	II	III	III, IV Trainee*
CLASS III	Less than 0.5	Less than 5,000	Conventional filtration	III	III	IV or Trainee*
CLASS III	5,000 or more		Approved treatment other than conventional filtration and fluoridation	III	IV	IV or Trainee*
CLASS III	Sufficient persons or connections to be classified as a Public		Not under higher classifications but using fluoridation	III	IV	Trainee*

	Water supply					
CLASS IV	Less than 5,000		Approved treatment other than conventional filtration and fluoridation or no treatment serving 400 or more persons	IV	IV	Trainee*

* Trainees should meet basic prerequisites for operators with the exception of experience and have potential for licensing wherever listed in these guidelines. Owner must provide a qualified substitute operator when only one operator is normally employed. The substitute must have the same class license as the operator.

12 VAC 5-590-470. Waterworks appearance.

The general appearance and state of cleanliness of a waterworks can greatly influence the attitude of the public toward a utility and can actually promote public health. A community without confidence in its public water supply with often resort to the use of water from questionable or polluted sources; therefore, the waterworks must be maintained in a clean and orderly condition to achieve this goal.

12 VAC 5-590-480. Analytical laboratory control.

A. Analyses and tests at waterworks are made for four main purposes: to control plant operation, to record plant performance, to improve plant performance, and to undertake fundamental research of value to the plant and to the profession in general. Tests designed to control operation should present evidence that:

1. The water has been properly prepared for each major key step in the treatment process;

2. Each key process such as mixing, coagulation, sedimentation, filtration, softening, iron and manganese removal, disinfection, and taste and odor control has proceeded according to plan; and

3. The finished product is clean, free from taste or odor, free from undesirable chemical characteristics, and safe for human consumption.

B. Laboratory analyses shall conform with the most current edition available of Standard Methods for the Examination of Water and Wastewater published by the American Public Health Association, the American Water Works Association, and the Water Pollution Control Federation, or analytical methods approved by the division. Ample laboratory space shall be provided.

1. Chemical. The analyses listed below are the minimum required. Additional testing may be required by the division.

a. Waterworks utilizing treatment for turbidity removal shall provide equipment for the analysis of pH, alkalinity, hardness, turbidity, water temperature and

coagulation dosage. An electric pH meter must be provided; however, a color comparator may be used as a back-up unit. Turbidities must be determined by the use of a nephelometer. Minimum equipment for coagulation control shall be a multiple jar stirring machine.

b. Waterworks providing softening only and utilizing chemical precipitation shall provide equipment for analysis of pH utilizing an electric pH meter, alkalinity, hardness, water temperature, and chemical dosage for precipitation utilizing a multiple jar stirring machine.

c. Waterworks providing iron and manganese removal by chemical precipitation shall provide equipment for analysis of pH, alkalinity, iron, manganese, and water temperature.

d. Waterworks providing fluoridation shall provide equipment for analysis of the fluoride ion concentration and water temperature.

e. Waterworks providing chlorination or rechlorination shall provide equipment for the analysis of chlorine residual and temperature.

f. Waterworks providing iron and manganese removal by ion exchange and or softening by ion exchange shall provide equipment for the analysis of iron and manganese, or hardness.

2. Bacteriological. Only results of bacteriological analyses performed by the Division of Consolidated Laboratory Services, or by laboratories and laboratory personnel certified by the Division of Consolidated Laboratory Services will be acceptable.

a. The number and frequency of bacteriological sampling shall comply with Article 1 of Part II. Additional analyses may be necessary when deemed so by the division.

b. Waterworks having a rated capacity of 3.0 mgd or more or serving an equivalent of 30,000 persons or more shall provide laboratory space and equipment for routine bacteriological analysis.

c. Bacteriological sampling in accordance with Article 1 of Part II is required by all waterworks.

12 VAC 5-590-490. Adequate treatment.

A. Adequate treatment is any one or any combination of the controlled processes of coagulation, sedimentation, absorption, filtration, disinfection, or other processes that produce a water consistently meeting the requirements of this chapter. The concept of adequate treatment also includes processes that are appropriate to the source of supply; waterworks that are of adequate capacity to meet maximum demands without creating health hazards, and that are located, designed, and constructed to eliminate or prevent cross connections; and conscientious operation by well-trained and competent personnel whose qualifications are commensurate with the responsibilities of the

position and acceptable to the division.

B. All waterworks shall provide adequate treatment and pure water.

12 VAC 5-590-500. Disinfection by chlorination.

A. All water supplies derived from surface water sources in whole or in part shall be disinfected in accordance with 12 VAC 5-590-1000 until June 29, 1993. It is recommended that a chlorine residual be maintained. Beginning June 29, 1993, every owner of a waterworks shall comply with the disinfection requirements of 12 VAC 5-590-420.

B. Waterworks utilizing surface waters as a water supply shall practice prechlorination. The requirement for prechlorination may be waived by the division when warranted.

C. Waterworks utilizing groundwater as a water supply that has been determined by the division to be under the direct influence of surface water, as provided in 12 VAC 5-590-430, will be required to disinfect. If the division determines that the groundwater supply is surface influenced, the waterworks owner shall provide disinfection during the interim before filtration is installed in accordance with 12 VAC 5-590-420 B 2 f. If filtration is installed prior to June 29, 1993, the owner shall comply with the disinfection requirements of 12 VAC 5-590-1000 until June 29, 1993. By June 29, 1993, all waterworks owners using a groundwater source determined to be under the direct influence of surface water must comply with the disinfection requirements of 12 VAC 5-590-420.

D. Any waterworks utilizing groundwater as a water supply that is not governed by 12 VAC 5-590-500 will be required to disinfect in accordance with 12 VAC 5-590-1000 if a sanitary survey reveals a potential source of contamination or if the water fails to meet the bacteriological quality standards set forth in Article 1 (12 VAC 5-590-340 et seq.) of Part II of this chapter.

E. Disinfection profile data and disinfection benchmark data.

1. Any waterworks that has disinfection profile data must retain this data in graphic form, as a spreadsheet, or in some other format acceptable to the commissioner for review as part of sanitary surveys conducted by the commissioner. Appendix L lists the procedure for developing a disinfection profile.

2. Disinfection benchmarking.

a. Any waterworks that has developed a disinfection profile and that decides to make a significant change to its disinfection practice must consult with the commissioner prior to making such change. Significant changes to disinfection practice are:

(1) Changes to the point of disinfection;

(2) Changes to the disinfectants used in the treatment plant;

(3) Changes to the disinfection process; and

(4) Any other modification identified by the commissioner.

b. Any waterworks that is modifying its disinfection practice must calculate its disinfection benchmark using the following procedure:

(1) For each year of profiling data collected, the waterworks must determine the lowest average monthly Giardia lamblia inactivation in each year of profiling data. The waterworks must determine the average Giardia lamblia inactivation for each calendar month for each year of profiling data by dividing the sum of daily (or weekly) Giardia lamblia inactivation by the number of values calculated for that month.

(2) The disinfection benchmark is the lowest monthly average value (for waterworks with one year of profiling data) or average of lowest monthly average values (for waterworks with more than one year of profiling data) of the monthly logs of Giardia lamblia inactivation in each year of profiling data.

(3) A waterworks that uses either chloramines or ozone for primary disinfection must also calculate the disinfection benchmark for viruses using a method approved by the commissioner.

c. The waterworks must submit the following information to the commissioner as part of the waterworks' consultation process.

(1) A description of the proposed change;

(2) The disinfection profile for Giardia lamblia (and, if necessary, viruses) and benchmark listed in subdivision E 2 b of this section;

(3) An analysis of how the proposed change will affect the current levels of disinfection; and

(4) Any additional information to justify the change.

12 VAC 5-590-510. Acceptable operating practices.

A. This section is not intended to be all inclusive but reflects the concern for the public health significance of certain practices related to treatment plant operation.

B. Waterworks designed for bacteria and turbidity removal shall not be operated without adequate chemical coagulation as determined by the division.

C. Waterworks utilizing filtration in the treatment process shall not vary the rate of filtration through any single filtering unit above its design capacity unless approved by the division.

D. Filtering units equipped with rewash facilities shall not be returned to service after backwashing until being thoroughly rewashed.

E. All waterworks shall provide a minimum working pressure of 20 psi at all service

connections.

12 VAC 5-590-520. Waterworks expansion.

A. At such time as the water production of a community waterworks reaches 80% of the rated capacity of the waterworks for any consecutive three-month period, the owner shall cause plans and specifications to be developed for expansion of the waterworks to include a schedule for construction; however, if it can be shown by the owner that growth within the service area is limited and will not exceed the rated capacity of the waterworks or if unusual transient conditions caused production to reach the 80% level, preparation of plans and specifications for expansion will no longer be required.

B. All waterworks shall provide metering of total water production.

12 VAC 5-590-530. Reporting.

A. The results of any required monitoring activity shall be reported by the waterworks owner to the appropriate field office no later than the 10th day of the month following the month during which the tests were taken.

1. Waterworks required to sample quarterly must report to the appropriate field office within 10 days after the end of each quarter in which samples were collected.

2. Waterworks required to sample less frequently than quarterly must report to the appropriate field office within 10 days after the end of each monitoring period in which samples were collected.

B. It shall be the duty and responsibility of an owner to report to the appropriate field office in the most expeditious manner (usually by telephone) under the following circumstances. If it is done by telephone a confirming report shall be mailed as soon as practical.

1. When a bacteriological examination shows a repeat sample is required (see 12 VAC 5-590-380 D), a report shall be made within 48 hours. A waterworks owner must report a total coliform PMCL violation to the appropriate field office no later than the end of the next business day.

2. When the daily average of turbidity testing exceeds 5 NTU a report shall be made within 48 hours.

3. When a Primary Maximum Contaminant Level of an inorganic or organic chemical is exceeded for a single sample the owner shall report same within seven days. If any one sample result would cause the compliance average to be exceeded the owner shall report same in 48 hours.

4. When the average value of samples collected pursuant to 12 VAC 5-590-410 exceeds the Primary Maximum Contaminant Level of any organic or inorganic chemical the owner shall report same within 48 hours.

5. When the maximum contaminant level for radionuclides has been exceeded

as determined by Table 2.5 the results shall be reported within 48 hours.

6. The waterworks owner shall report to the appropriate field office within 48 hours the failure to comply with the monitoring and sanitary survey requirements of this chapter.

7. The waterworks owner shall report to the appropriate field office within 48 hours the failure to comply with the requirements of any schedule prescribed pursuant to a variance or exemption.

8. The waterworks owner shall report a Tier 1 violation or situation, as described in 12 VAC 5-590-540 A 1, to the appropriate field office as soon as practical, but no later than 24 hours after the waterworks learns of the Tier 1 violation or situation. At the same time the report is made, the owner shall consult with the field office to determine the need for any additional actions to address the violation or situation.

9. The waterworks owner shall report a violation of treatment technique requirement resulting from a single exceedance of the maximum allowable turbidity limit, as described in 12 VAC 5-590-420 B 2 a (2), B 2 a (3) (b), B 2 b (2), B 2 c (2), and B 2 d, to the appropriate field office as soon as practical, but no later than 24 hours after the waterworks learns of the violation. At the same time the report is made, the owner shall consult with the field office to determine the need for any additional actions to address the violation or situation.

C. Reporting requirements for filtration treatment and disinfection treatment.

1. The owner of a waterworks that provides filtration treatment shall report monthly to the division the following specified information beginning June 29, 1993, or when filtration is installed, whichever is later.

a. Turbidity measurements as required by 12 VAC 5-590-370 B 7 a shall be reported within 10 days after the end of each month the waterworks serves water to the public. Information that shall be reported includes:

(1) The total number of filtered water turbidity measurements taken during the month.

(2) The number and percentage of filtered water turbidity measurements taken during the month which are less than or equal to the turbidity limits specified in 12 VAC 5-590-420 B 2 for the filtration technology being used.

(3) The date and value of any turbidity measurements taken during the month which exceed 5 NTU.

b. A waterworks using surface water or groundwater under the direct influence of surface water that provides conventional filtration treatment or direct filtration must report monthly to the commissioner the information specified in subdivisions C 1 a (1) and (2) of this section beginning January 1, 2002, for waterworks serving at least 10,000 people or January 1, 2005, for

waterworks serving less than 10,000 people. Also, a waterworks that provides filtration approved under 12 VAC 5-590-420 B 2 d must report monthly to the commissioner the information specified in subdivision C 1 a (1) of this section beginning January 1, 2002, for waterworks serving at least 10,000 people or January 1, 2005, for waterworks serving less than 10,000 people.

(1) Turbidity measurements as required by 12 VAC 5-590-420 B 2 a (3) must be reported within 10 days after the end of each month the system serves water to the public. Information that must be reported includes:

(a) The total number of filtered water turbidity measurements taken during the month.

(b) The number and percentage of filtered water turbidity measurements taken during the month that are less than or equal to the turbidity limits specified in 12 VAC 5-590-420 B 2 a (3) or 12 VAC 5-590-420 B 2 d.

(c) The date and value of any turbidity measurements taken during the month that exceed 1 NTU for systems using conventional filtration treatment or direct filtration, or that exceed the maximum level set by the commissioner under 12 VAC 590-420 B 2 d.

(2) Waterworks must maintain the results of individual filter monitoring taken under 12 VAC 5-590-370 B 7 b (1) for at least three years. Waterworks must report that they have conducted individual filter turbidity monitoring under 12 VAC 5-590-370 B 7 b (1) within 10 days after the end of each month the waterworks system serves water to the public. Waterworks must report individual filter turbidity measurement results taken under 12 VAC 5-590-370 B 7 b (1) within 10 days after the end of each month the waterworks serves water to the public only if measurements demonstrate one or more of the conditions in subdivisions C 1 b (2) (a) or (b) of this section. Waterworks that use lime softening may apply to the commissioner for alternative exceedance levels for the levels specified in subdivisions C 1 b (2) (a) or (b) of this section if they can demonstrate that higher turbidity levels in individual filters are due to lime carryover only and not due to degraded filter performance.

(a) For waterworks serving 10,000 or more people:

(i) For any individual filter that has a measured turbidity level of greater than 1.0 NTU in two consecutive measurements taken 15 minutes apart, the waterworks must report the filter number, the turbidity measurement, and the date, or dates, on which the exceedance occurred. In addition, the waterworks must either produce a filter profile for the filter within seven days of the exceedance (if the waterworks is not able to identify an obvious reason for the abnormal filter performance) and report that the

profile has been produced or report the obvious reason for the exceedance.

(ii) For any individual filter that has a measured turbidity level of greater than 0.5 NTU in two consecutive measurements taken 15 minutes apart at the end of the first four hours of continuous filter operation after the filter has been backwashed or otherwise taken offline, the waterworks must report the filter number, the turbidity, and the date, or dates, on which the exceedance occurred. In addition, the waterworks must either produce a filter profile for the filter within seven days of the exceedance (if the waterworks is not able to identify an obvious reason for the abnormal filter performance) and report that the profile has been produced or report the obvious reason for the exceedance.

(iii) For any individual filter that has a measured turbidity level of greater than 1.0 NTU in two consecutive measurements taken 15 minutes apart at any time in each of three consecutive months, the waterworks must report the filter number, the turbidity measurement, and the date, or dates, on which the exceedance occurred. In addition, the waterworks must conduct a self-assessment of the filter within 14 days of the exceedance and report that the self-assessment was conducted. The self-assessment must consist of at least the following components: assessment of filter performance; development of a filter profile; identification and prioritization of factors limiting filter performance; assessment of the applicability of corrections; and preparation of a filter self-assessment report.

(iv) For any individual filter that has a measured turbidity level of greater than 2.0 NTU in two consecutive measurements taken 15 minutes apart at any time in each of two consecutive months, the waterworks must report the filter number, the turbidity measurement, and the date, or dates, on which the exceedance occurred. In addition, the waterworks must arrange for the conduct of a comprehensive performance evaluation by the commissioner or a third party approved by the commissioner no later than 30 days following the exceedance and have the evaluation completed and submitted to the commissioner no later than 90 days following the exceedance.

(b) For waterworks serving less than 10,000 people:

(i) For any individual filter (or the turbidity of combined filter effluent for systems with two filters that monitor combined filter effluent in lieu of individual filters) that has a measured turbidity level of greater than 1.0 NTU in two consecutive measurements taken 15

minutes apart, the waterworks must report the filter number(s), the turbidity measurement(s), and the date, or dates, on which the exceedance occurred and the cause (if known) for the exceedance(s).

(ii) For any individual filter (or the turbidity of combined filter effluent for systems with two filters that monitor combined filter effluent in lieu of individual filters) that has a measured turbidity level of greater than 1.0 NTU in two consecutive measurements taken 15 minutes apart at any time in each of three consecutive months, the waterworks must conduct a self-assessment of the filter(s) within 14 days of the day the filter exceeded 1.0 NTU unless a comprehensive performance evaluation as specified in paragraph (iii) of this section was required. Waterworks with two filters that monitor the combined filter effluent in lieu of individual filters must conduct a self assessment on both filters. The self-assessment must be reported to the commissioner and consist of at least the following components: assessment of filter performance; development of a filter profile; identification and prioritization of factors limiting filter performance; assessment of the applicability of corrections; and preparation of a filter self-assessment report. The self assessment must be submitted within 10 days after the end of the month or 14 days after the self assessment was triggered only if it was triggered during the last four days of the month.

(iii) For any individual filter (or the turbidity of combined filter effluent for systems with two filters that monitor combined filter effluent in lieu of individual filters) that has a measured turbidity level of greater than 2.0 NTU in two consecutive measurements taken 15 minutes apart at any time in each of two consecutive months, the waterworks must arrange for a comprehensive performance evaluation by the commissioner or a third party approved by the commissioner no later than 60 days following the day the filter exceeded 2.0 NTU in two consecutive months. The waterworks must report within 10 days after the end of the month that a comprehensive performance evaluation is required and the date that it was triggered. If a comprehensive performance evaluation has been completed by the commissioner or a third party approved by the commissioner within the 12 prior months or the waterworks and the commissioner are jointly participating in an ongoing Comprehensive Technical Assistance project at the waterworks, a new comprehensive performance evaluation is not required. If conducted, a comprehensive performance evaluation must be completed and submitted to the commissioner no later than 120 days following the day the filter exceeded 2.0 NTU in two

consecutive measurements for the second straight month.

2. Disinfection information specified below shall be reported to the division within 10 days after the end of each month the waterworks serves water to the public. Information that shall be reported includes:

a. For each day, the lowest measurement of residual disinfectant concentration in mg/l in water entering the distribution system.

b. The date and duration of each period when the residual disinfectant concentration in water entering the distribution system fell below 0.2 mg/l and when the division was notified of the occurrence.

c. The following information on the samples taken in the distribution system in conjunction with total coliform monitoring pursuant to 12 VAC 5-590-420 B.

(1) Number of instances where the residual disinfectant concentration is measured;

(2) Number of instances where the residual disinfectant concentration is not measured but HPC is measured;

(3) Number of instances where the residual disinfectant concentration is measured but not detected and no HPC is measured;

(4) Number of instances where no residual disinfectant concentration is detected and where HPC is greater than 500/mL;

(5) Number of instances where the residual disinfectant concentration is not measured and HPC is greater than 500/mL;

(6) For the current and previous month the system serves water to the public, the value of "V" in percent in the following formula:

$$V = \frac{c + d + e}{a + b} \times 100$$

a = the value in subdivision C 2 c (1) of this section

b = the value in subdivision C 2 c (2) of this section

c = the value in subdivision C 2 c (3) of this section

d = the value in subdivision C 2 c (4) of this section

e = the value in subdivision C 2 c (5) of this section

(7) If the division determines, based on site specific considerations, that a waterworks owner has no means for having a sample transported and analyzed for HPC by a certified laboratory within the requisite time and temperature conditions and that the waterworks is providing adequate disinfection in the distribution system, the requirements of subdivision C 2

c (1) through (6) of this section do not apply.

d. A waterworks owner need not report the data listed in subdivision C 2 a of this section if all data listed in subdivisions C 2 a through c of this section remain on file at the waterworks and the division determines that the waterworks owner has submitted all of the information required by subdivisions C 2 a through c of this section for the last 12 months.

3. If at any time the chlorine residual falls below 0.2 mg/l in the water entering the distribution system, the waterworks owner shall notify the division as soon as possible, but no later than by the end of the next business day. The waterworks owner also shall notify the division by the end of the next business day whether or not the residual was restored to at least 0.2 mg/l within four hours.

D. Reporting requirements for lead and copper. All waterworks owners shall report all of the following information to the appropriate field office in accordance with this section.

1. Reporting requirements for tap water monitoring for lead and copper and for water quality parameter monitoring.

a. A waterworks owner shall report the information specified below for all tap water samples within the first 10 days following the end of each applicable monitoring period specified in 12 VAC 5-590-370 B 6 a, b and c (i.e., every six months, annually, or every three years).

(1) The results of all tap samples for lead and copper including location or a location site code and the criteria under 12 VAC 5-590-370 B 6 a (1) (c), (d), (e), (f) and/or (g) under which the site was selected for the waterworks' sampling pool;

(2) A certification that each first draw sample collected by the waterworks is one-liter in volume and, to the best of their knowledge, has stood motionless in the service line, or in the interior plumbing of a sampling site, for at least six hours;

(3) Where residents collected samples, a certification that each tap sample collected by the residents was taken after the waterworks owner informed them of proper sampling procedures specified in 12 VAC 5-590-370 B 6 a (2) (b);

(4) The 90th percentile lead and copper concentrations measured from among all lead and copper tap water samples collected during each monitoring period (calculated in accordance with 12 VAC 5-590-410 E 3);

(5) With the exception of initial tap sampling conducted pursuant to 12 VAC 5-590-370 B 6 a (4) (a), the waterworks owner shall designate any site which was not sampled during previous monitoring periods, and include an explanation of why sampling sites have changed;

(6) The results of all tap samples for pH, and where applicable, alkalinity, calcium, conductivity, temperature, and orthophosphate or silica collected under 12 VAC 5-590-370 B 6 b (2) through (5);

(7) The results of all samples collected at the entry point(s) to the distribution system for applicable water quality parameters under 12 VAC 5-590-370 B 6 b (2) through (5).

b. By the applicable date in 12 VAC 5-590-370 B 6 a (4) (a) for commencement of monitoring, the owner of each community waterworks which does not complete the targeted sampling pool with tier 1 sampling sites meeting the criteria in 12 VAC 5-590-370 B 6 a (1) (c) shall send a letter to the appropriate field office justifying the selection of tier 2 and/or tier 3 sampling sites under 12 VAC 5-590-370 B 6 a (1) (d) and/or (e).

c. By the applicable date in 12 VAC 5-590-370 B 6 a (4) (a) for commencement of monitoring, the owner of each nontransient, noncommunity waterworks which does not complete the sampling pool with tier 1 sampling sites meeting the criteria in 12 VAC 5-590-370 B 6 a (1) (f) shall send a letter to the appropriate field office justifying the selection of sampling sites under 12 VAC 5-590-370 B 6 a (1) (g).

d. By the applicable date in 12 VAC 5-590-370 B 6 a (4) (a) for commencement of monitoring, the owner of each waterworks with lead service lines that is not able to locate the number of sites served by such lines required under 12 VAC 5-590-370 B 6 a (1) (b) (i) shall send a letter to the appropriate field office demonstrating why the owner was unable to locate a sufficient number of such sites based upon the information listed in 12 VAC 5-590-370 B 6 a (1) (b).

e. Each waterworks owner who requests that the commissioner reduce the number and frequency of sampling shall provide the information required under 12 VAC 5-590-370 B 6 a (4) (d).

2. Water supply (source water) monitoring reporting requirements.

a. A waterworks owner shall report the sampling results for all source water samples collected in accordance with 12 VAC 5-590-370 B 6 c within the first 10 days following the end of each source water monitoring period (i.e., annually, per compliance period, per compliance cycle) specified in 12 VAC 5-590-370 B 6 c.

b. With the exception of the first round of source water sampling conducted pursuant to 12 VAC 5-590-370 B 6 c (2), the waterworks owner shall specify any site which was not sampled during previous monitoring periods, and include an explanation of why the sampling point has changed.

3. Corrosion control treatment reporting requirements. By the applicable dates under 12 VAC 5-590-420 C 2, waterworks owners shall report the following

information:

a. For waterworks demonstrating that they have already optimized corrosion control, information required in 12 VAC 5-590-420 C 2 b (2) or (3).

b. For waterworks required to optimize corrosion control, the owner's recommendation regarding optimal corrosion control treatment under 12 VAC 5-590-420 C 1 a.

c. For waterworks required to evaluate the effectiveness of corrosion control treatments under 12 VAC 5-590-420 C 1 c, the information required by that subdivision.

d. For waterworks required to install optimal corrosion control designated by the commissioner under 12 VAC 5-590-420 C 1 d (1), a letter certifying that the owner has completed installing that treatment.

4. Water supply source water treatment reporting requirements. By the applicable dates in 12 VAC 5-590-420 D, waterworks owners shall provide the following information to the appropriate field office:

a. If required under 12 VAC 5-590-420 D 2 a, the owner's recommendation regarding source water treatment;

b. For waterworks required to install source water treatment under 12 VAC 5-590-420 D 2 b, a letter certifying that the waterworks has completed installing the treatment designated by the commissioner within 24 months after the commissioner designated the treatment.

5. Lead service line replacement reporting requirements. Waterworks owners shall report the following information to the appropriate field office to demonstrate compliance with the requirements of 12 VAC 5-590-420 E:

a. Within 12 months after a waterworks exceeds the lead action level in sampling referred to in 12 VAC 5-590-420 E 1, the owner shall demonstrate in writing to the appropriate field office that the owner has conducted a materials evaluation, including the evaluation in 12 VAC 5-590-370 B 6 a (1), to identify the initial number of lead service lines in the distribution system, and shall provide the appropriate field office with the waterworks' schedule for replacing annually at least 7.0% of the initial number of lead service lines in its distribution system.

b. Within 12 months after a waterworks exceeds the lead action level in sampling referred to in 12 VAC 5-590-420 E 1, and every 12 months thereafter, the waterworks owner shall demonstrate to the appropriate field office in writing that the waterworks owner has either:

(1) Replaced in the previous 12 months at least 7.0% of the initial lead service lines (or a greater number of lines specified by the commissioner under 12 VAC 5-590-420 E 6) in the distribution system, or

(2) Conducted sampling which demonstrates that the lead concentration in all service line samples from an individual line(s), taken pursuant to 12 VAC 5-590-370 B 6 a (7) (c), is less than or equal to 0.015 mg/l. In such cases, the total number of lines replaced and/or which meet the criteria in 12 VAC 5-590-420 E 3 shall equal at least 7.0% of the initial number of lead lines identified under subdivision D 5 a of this section (or the percentage specified by the commissioner under 12 VAC 5-590-420 E 6).

c. The annual letter submitted to the appropriate field office under subdivision D 5 b of this section shall contain the following information:

(1) The number of lead service lines scheduled to be replaced during the previous year of the waterworks' replacement schedule;

(2) The number and location of each lead service line replaced during the previous year of the waterworks' replacement schedule;

(3) If measured, the water lead concentration and location of each lead service line sampled, the sampling method, and the date of sampling.

d. As soon as practicable, but in no case later than three months after a waterworks exceeds the lead action level in sampling referred to in 12 VAC 5-590-420 E 1, any waterworks owner seeking to rebut the presumption that it has control over the entire lead service line pursuant to 12 VAC 5-590-420 E 4 shall submit a letter to the appropriate field office describing the legal authority (e.g., state statutes, municipal ordinances, public service contracts or other applicable legal authority) which limits the waterworks owner's control over the service lines and the extent of the waterworks owner's control.

6. Public education program reporting requirements. By December 31st of each year, the owner of any waterworks that is subject to the public education requirements in 12 VAC 5-590-420 F shall submit a letter to the appropriate field office demonstrating that the waterworks owner has delivered the public education materials that meet the content requirements in 12 VAC 5-590-420 F 1 and 2 and the delivery requirements in 12 VAC 5-590-420 F 3. This information shall include a list of all the newspapers, radio stations, television stations, facilities and organizations to which the owner delivered public education materials during the previous year. The owner shall submit the letter required by this subdivision annually for as long as it exceeds the lead action level.

7. Reporting of additional monitoring data. The owner of any waterworks which collects sampling data in addition to that required by this subpart shall report the results to the appropriate field office within the first 10 days following the end of the applicable monitoring period under 12 VAC 5-590-370 B 6 a, b and c during which the samples are collected.

E. Reporting requirements for disinfection byproducts. Waterworks must report the following information in accordance with subsection A of this section. (The field office

may choose to perform calculations and determine whether the PMCL was violated, in lieu of having the waterworks report that information):

1. A waterworks monitoring for TTHM and HAA5 under the requirements of 12 VAC 5-590-370 B 3 a on a quarterly or more frequent basis must report:

a. The number of samples taken during the last quarter.

b. The location, date, and result of each sample taken during the last quarter.

c. The arithmetic average of all samples taken in the last quarter.

d. The annual arithmetic average of the quarterly arithmetic averages of this section for the last four quarters.

e. Whether, based on 12 VAC 5-590-410 C 2 b, the PMCL was violated.

2. A waterworks monitoring for TTHMs and HAA5 under the requirements of 12 VAC 5-590-370 B 3 a less frequently than quarterly (but at least annually) must report:

a. The number of samples taken during the last year.

b. The location, date, and result of each sample taken during the last monitoring period.

c. The arithmetic average of all samples taken over the last year.

d. Whether, based on 12 VAC 5-590-410 C 2 b the PMCL was violated.

3. A waterworks monitoring for TTHMs and HAA5 under the requirements of 12 VAC 5-590-370 B 3 a less frequently than annually must report:

a. The location, date, and result of the last sample taken.

b. Whether, based on 12 VAC 5-590-410 C 2 b, the PMCL was violated.

4. A waterworks monitoring for chlorite under the requirements of 12 VAC 5-590-370 B 3 f must report:

a. The number of entry point samples taken each month for the last three months.

b. The location, date, and result of each sample (both entry point and distribution system) taken during the last quarter.

c. For each month in the reporting period, the arithmetic average of all samples taken in each three sample set taken in the distribution system.

d. Whether, based on 12 VAC 5-590-410 C 2 b, the PMCL was violated, in which month and how many times it was violated each month.

5. A waterworks monitoring for bromate under the requirements of 12 VAC 5-590-370 B 3 g must report:

a. The number of samples taken during the last quarter.

b. The location, date, and result of each sample taken during the last quarter.

c. The arithmetic average of the monthly arithmetic averages of all samples taken in the last year.

d. Whether, based on 12 VAC 5-590-410 C 2 b, the PMCL was violated.

F. Reporting requirements for disinfectants. Waterworks must report the information specified below in accordance with subsection A of this section. (The field office may choose to perform calculations and determine whether the MRDL was violated, in lieu of having the waterworks report that information):

1. A waterworks monitoring for chlorine or chloramines under the requirements of 12 VAC 5-590-370 B 3 h must report:

a. The number of samples taken during each month of the last quarter.

b. The monthly arithmetic average of all samples taken in each month for the last 12 months.

c. The arithmetic average of all monthly averages for the last 12 months.

d. Whether, based on 12 VAC 5-590-410 C 2 c, the MRDL was violated.

2. A waterworks monitoring for chlorine dioxide under the requirements of 12 VAC 5-590-370 B 3 h must report:

a. The dates, results, and locations of samples taken during the last quarter.

b. Whether, based on 12 VAC 5-590-410 C 2 c, the MRDL was violated.

c. Whether the MRDL was exceeded in any two consecutive daily samples and whether the resulting violation was acute or nonacute.

G. Reporting requirements for disinfection byproduct precursors and enhanced coagulation or enhanced softening. Waterworks must report the following information in accordance with subsection A of this section. (The field office may choose to perform calculations and determine whether the treatment technique was met, in lieu of having the waterworks report that information):

1. A waterworks monitoring monthly or quarterly for TOC under the requirements of 12 VAC 5-590-370 B 3 i and required to meet the enhanced coagulation or enhanced softening requirements in 12 VAC 5-590-420 H 2 b or c must report:

a. The number of paired (source water and treated water) samples taken during the last quarter.

b. The location, date, and results of each paired sample and associated alkalinity taken during the last quarter.

c. For each month in the reporting period that paired samples were taken, the arithmetic average of the percent reduction of TOC for each paired sample and the required TOC percent removal.

d. Calculations for determining compliance with the TOC percent removal requirements, as provided in 12 VAC 5-590-420 H 3 a.

e. Whether the system is in compliance with the enhanced coagulation or enhanced softening percent removal requirements in 12 VAC 5-590-420 H 2 a for the last four quarters.

2. A waterworks monitoring monthly or quarterly for TOC under the requirements of 12 VAC 5-590-370 B 3 i and meeting one or more of the alternative compliance criteria in 12 VAC 5-590-420 H 1 b or c must report:

a. The alternative compliance criterion that the system is using.

b. The number of paired samples taken during the last quarter.

c. The location, date, and result of each paired sample and associated alkalinity taken during the last quarter.

d. The running annual arithmetic average based on monthly averages (or quarterly samples) of source water TOC for systems meeting a criterion in 12 VAC 5-590-420 H 1 b (1) or (3) or of treated water TOC for systems meeting the criterion in 12 VAC 5-590-420 H 1 b (2).

e. The running annual arithmetic average based on monthly averages (or quarterly samples) of source water SUVA for systems meeting the criterion in 12 VAC 5-590-420 H 1 b (5) or of treated water SUVA for systems meeting the criterion in 12 VAC 5-590-420 H 1 b (6).

f. The running annual average of source water alkalinity for systems meeting the criterion in 12 VAC 5-590-420 H 1 b (3) and of treated water alkalinity for systems meeting the criterion in 12 VAC 5-590-420 H 1 c (1).

g. The running annual average for both TTHM and HAA5 for systems meeting the criterion in 12 VAC 5-590-420 H 1 b (3) or (4).

h. The running annual average of the amount of magnesium hardness removal (as $CaCO_3$, in mg/l) for systems meeting the criterion in 12 VAC 5-590-420 H 1 c (2).

i. Whether the system is in compliance with the particular alternative compliance criterion in 12 VAC 5-590-420 H 1 b or c.

H. Reporting of analytical results to the appropriate field office will not be required in instances where the state laboratory performs the analysis and reports same to that office.

I. Recycle flow reporting requirements. Any waterworks supplied by a surface water source and waterworks supplied by a groundwater source under the direct influence of surface water that employ conventional filtration or direct filtration treatment must notify the state in writing by December 8, 2003, if the system recycles spent filter backwash water, thickener supernatant, or liquids from dewatering processes. This notification

must include, as a minimum:

1. A plant schematic showing the origin of all flows that are recycled, including but not limited to spent filter backwash water, thickener supernatant, and liquids from dewatering processes. The schematic shall also specify the hydraulic conveyance used to transport all recycle flows and the location where recycle flows are reintroduced back into the treatment plant.

2. Typical recycle flow in gallons per minute (gpm), the highest observed plant flow experienced in the previous year (gpm), design flow for the treatment plant (gpm), and state-approved operating capacity for the plant.

J. Information to be included on the operation monthly report shall be determined by the division for each waterworks on an individual basis. Appendix G contains suggested monthly operation report requirements.

12 VAC 5-590-540. Public notices.

A. All community and noncommunity waterworks owners shall give public notice to (i) persons served by the waterworks and (ii) the owner of any consecutive waterworks to which it sells or otherwise provides water under the following circumstances:

1. Tier 1.

a. Violation of the PMCL for total coliforms when fecal coliform or E. coli are present in the distribution system;

b. Failure to test for fecal coliforms or E. coli when any repeat sample tests positive for coliform;

c. Violation of the PMCL for nitrate, nitrate, nitrite, or total nitrate and nitrite;

d. Failure to take a confirmation sample within 24 hours of the waterworks receipt of the first sample showing an exceedance of the nitrate or nitrite PMCL;

e. Exceedance of the nitrate PMCL by noncommunity waterworks, where permitted to exceed the PMCL by the commissioner;

f. Violation of the MRDL for chlorine dioxide when one or more samples taken in the distribution system the day following an exceedance of the MRDL at the entry point of the distribution system exceed the MRDL;

g. Failure to monitor chlorine dioxide residuals in the distribution system the day following an exceedance of the chlorine dioxide MRDL at the entrance to the distribution system;

h. Violation of the treatment technique requirements for filtration and disinfection resulting from a single exceedance of the maximum allowable turbidity limit, where the commissioner determines after consultation that a Tier 1 notice is required;

i. Failure to consult with the commissioner within 24 hours after the owner

learns of the violation of the treatment technique requirements for filtration and disinfection resulting from a single exceedance of the maximum allowable turbidity limit;

j. Occurrence of a waterborne disease outbreak or other waterborne emergency (such as a failure or significant interruption in key water treatment processes, a natural disaster that disrupts the water supply or distribution system, or a chemical spill or unexpected loading of possible pathogens into the source water that significantly increases the potential for drinking water contamination);

k. Other violations or situations with significant potential to have serious adverse effects on human health as a result of short-term exposure, as determined by the commissioner on a case-by-case basis.

2. Tier 2.

a. All violations of the PMCL, MRDL, and treatment technique requirements, except where a Tier 1 public notice is required or where the commissioner determines that a Tier 1 notice is required per subdivision 1 k of this subsection;

b. Violations of the monitoring and testing procedure requirements, where the commissioner determines that a Tier 2 rather than a Tier 3 public notice is required, taking into account potential health impacts and persistence of the violation; and

c. Failure to comply with the terms and conditions of any variance or exemption in place.

3. Tier 3.

a. Monitoring violations, except where a Tier 1 public notice is required per subdivisions 1 d and 1 g of this subsection, or where the commissioner determines that a Tier 2 public notice is required per subdivision 2 b of this subsection;

b. Failure to comply with a testing procedure, except where a Tier 1 notice is required per subdivision 1 b of this subsection or where the commissioner determines that a Tier 2 notice is required per subdivision 2 b of this subsection;

c. Operation under a variance or an exemption;

d. Availability of unregulated contaminant monitoring results; and

e. Exceedance of the fluoride secondary maximum contaminant level (SMCL).

B. If a waterworks has a violation, failure, exceedance, or situation in a portion of the distribution system that is physically or hydraulically isolated from other parts of the

distribution system, the commissioner may allow the owner to limit distribution of the public notice to only those persons served by that portion of the waterworks which is out of compliance. The decision granting limited distribution of the public notice shall be issued in writing.

C. Public notice distribution requirements.

1. For Tier 1 violations, exceedances, or situations, the owner shall:

a. Provide a public notice as soon as practical but no later than 24 hours after the waterworks learns of the violation, exceedance, or situation;

b. Initiate consultation with the commissioner as soon as practical, but no later than 24 hours after the waterworks learns of the violation or situation, to determine additional public notice requirements;

c. Comply with any additional public notice requirements, including any repeat notices or direction on the duration of the posted notices, that are established as a result of the consultation with the commissioner. Such requirements may include the timing, form, manner, frequency, and content of repeat notices (if any) and other actions designed to reach all persons served; and

d. Provide the public notice in a form and manner reasonably calculated to reach all persons served. The form and manner shall fit the specific situation, and shall be designed to reach residential, transient, and non-transient users of the waterworks. In order to reach all persons served, owners shall use, at a minimum, one or more of the following forms of delivery:

(1) Appropriate broadcast media (such as radio and television);

(2) Posting of the public notice in conspicuous locations throughout the area served by the waterworks;

(3) Hand delivery of the public notice to persons served by the water system; or

(4) Another delivery method approved in writing by the commissioner.

2. For Tier 2 violations, exceedances, or situations the owner shall:

a. Provide the public notice as soon as practical, but no later than 30 days after the waterworks learns of the violation, exceedance, or situation. The commissioner may allow, on a case-by-case determination, additional time for the initial notice of up to three months from the date the waterworks learns of the violation, exceedance, or situation; however, the commissioner shall not grant an extension to the 30-day deadline for any unresolved violation.

b. Repeat the public notice every three months as long as the violation, exceedance, or situation persists, unless the commissioner determines that appropriate circumstances warrant a different repeat notice frequency. In no circumstance shall the repeat notice be given less frequently than once per

year. Repeat notice frequency less than every three months shall not be allowed for (i) a PMCL violation total coliforms; (ii) a treatment technique violation for filtration and disinfection; and (iii) other ongoing violations, exceedances, or situations.

c. Consult with the commissioner as soon as practical but no later than 24 hours after the waterworks learns of a violation of the treatment technique requirements for filtration and disinfection resulting from a single exceedance of the maximum allowable turbidity limit to determine whether a Tier 1 public notice is required to protect public health. If consultation does not take place within the 24-hour period, the waterworks shall distribute a Tier 1 public notice of the violation within the next 24 hours (i.e., no later than 48 hours after the waterworks learns of the violation).

d. Provide the initial public notice and any repeat notices in a form and manner that is reasonably calculated to reach persons served in the required time period.

(1) For community waterworks, the owner shall:

(a) Mail or otherwise directly deliver the public notice to each customer receiving a bill and to other service connections to which water is delivered by the waterworks; and

(b) Use any other distribution method reasonably calculated to reach other persons regularly served by the waterworks, if they would not normally be reached by the notice required in subdivision 2 d (1) (a) of this subsection. Such persons may include those who do not pay water bills or do not have service connection addresses (e.g., house renters, apartment dwellers, university students, nursing home patients, prison inmates, etc.). Other methods may include: Publication in a local newspaper; delivery of multiple copies for distribution by customers that provide their drinking water to others (e.g., apartment building owners or large private employers); posting in public places served by the system or on the Internet; or delivery to community organizations.

(2) For noncommunity waterworks, the owner shall:

(a) Post the public notice in conspicuous locations throughout The distribution system frequented by persons served by the waterworks, or by mail or direct delivery to each customer and service connection (where known); and

(b) Use any other method reasonably calculated to reach other persons served by the system if they would not normally be reached by the notice required in subdivision 2 d (2) (a) of this subsection. Such persons may include those served who may not see a posted notice because the posted notice is not in a location they routinely pass by.

Other methods may include publication in a local newspaper or newsletter distributed to customers, use of e-mail to notify employees or students, or delivery of multiple copies in central locations (e.g., community centers).

e. Maintain a posted public notice in place for as long as the violation, exceedance, or situation persists, but in no case for less than seven days, even if the violation, exceedance, or situation is resolved.

3. For Tier 3 violations, exceedances, or situations the owner shall:

a. Provide the public notice not later than one year after the waterworks learns of the violation, exceedance, or situation or begins operating under a variance or exemption.

b. Repeat the public notice annually for as long as the violation, exceedance, variance, exemption, or other situation persists.

c. Maintain a posted public notice in place for as long as the violation, exceedance, variance, exemption, or other situation persists, but in no case less than seven days even if the violation or situation is resolved.

d. Instead of individual Tier 3 public notices, the owner may use an annual report detailing all violations, exceedances, and situations that occurred during the previous twelve months, as long as the timing requirements of subdivision 3 a of this subsection are met. For community waterworks the Consumer Confidence Report (CCR) may be used as a vehicle for the initial Tier 3 public notice and all required repeat notices, provided:

(1) The CCR is provided to persons served by the waterworks no later than 12 months after the waterworks learns of the violation, exceedance, or other situation;

(2) The Tier 3 public notice contained in the CCR meets the content requirements in subsection E of this section.

(3)The CCR is distributed in a manner meeting the delivery requirements in subdivision D 3 e of this section.

e. For community waterworks the owner shall:

(1) Mail or otherwise directly deliver the public notice to each customer receiving a bill and to other service connections to which water is delivered by the waterworks; and

(2) Use any other method reasonably calculated to reach other persons regularly served by the system, if they would not normally be reached by the notice required in subdivision 3 e (1) of this subsection. Such persons may include those who do not pay water bills or do not have service connection addresses (e.g., house renters, apartment dwellers, university students, nursing home patients, prison inmates, etc.). Other methods

may include publication in a local newspaper, delivery of multiple copies for distribution by customers that provide their drinking water to others (e.g., apartment building owners or large private employers), posting in public places or on the Internet, or delivery to community organizations.

f. For noncommunity waterworks the owner shall:

(1) Post the public notice in conspicuous locations throughout the distribution system frequented by persons served by the waterworks, or by mail or direct delivery to each customer and service connection (where known); and

(2) Use any other method reasonably calculated to reach other persons served by the system, if they would not normally be reached by the notice required in subdivision 3 f (1) of this subsection. Such persons may include those who may not see a posted notice because the notice is not in a location they routinely pass by. Other methods may include: Publication in a local newspaper or newsletter distributed to customers; use of E-mail to notify employees or students; or, delivery of multiple copies in central locations (e.g., community centers).

D. Public notice contents.

1. Each public notice for PMCL, MRDL, and TT violations and other situations requiring a public notice shall include the following elements:

a. A description of the violation, exceedance, or situation, including the contaminant(s) of concern, and (as applicable) the contaminant level(s);

b. When the violation or situation occurred;

c. Any potential adverse health effects from the violation, exceedance, or situation, including the standard language under subdivision 5 a or 5 b of this subsection, whichever is applicable;

d. The population at risk, including subpopulations particularly vulnerable if exposed to the contaminant in their drinking water;

e. Whether alternative water supplies should be used;

f. What actions consumers should take, including when they should seek medical help, if known;

g. What the waterworks is doing to correct the violation, exceedance, or situation;

h. When the waterworks expects to return to compliance or resolve the situation;

i. The name, business address, and phone number of the waterworks owner, operator, or designee as a source of additional information concerning the notice; and

j. A statement to encourage the notice recipient to distribute the public notice to other persons served, using the standard language under subdivision 5 c of this subsection, where applicable.

2. Each public notice for a waterworks that has been granted a variance or exemption shall include the following elements:

a. An explanation of the reasons for the variance or exemption;

b. The date on which the variance or exemption was issued;

c. A brief status report on the steps the waterworks is taking to install treatment, find alternative sources of water, or otherwise comply with the terms and schedules of the variance or exemption; and

d. A notice of any opportunity for public input in the review of the variance or exemption.

3. Each public notice for a waterworks that violates the conditions of a variance or exemption shall contain the ten elements listed in subdivision 1 of this subsection.

4. Each public notice shall:

a. Be displayed in a conspicuous way when printed or posted;

b. Not contain overly technical language or very small print;

c. Not be formatted in a way that defeats the purpose of the notice;

d. Not contain language which nullifies the purpose of the notice.

e. Contain information in the appropriate language(s), for waterworks serving a large proportion of non-English speaking consumers, regarding the importance of the notice or contain a telephone number or address where persons served may contact the waterworks to obtain a translated copy of the notice or to request assistance in the appropriate language.

5. The public notice shall include the following standard language:

a. For PMCL or MRDL violations, treatment technique violations, and violations of the condition of a variance or exemption--standard health effects language as specified in Appendix O corresponding to each PMCL, MRDL, and treatment technique violation and for each violation of a condition of a variance or exemption.

b. For monitoring and testing procedure violations --standard language as specified below, including the language necessary to fill in the blanks:

We are required to monitor your drinking water for specific contaminants on a regular basis. Results of regular monitoring are an indicator of whether or not your drinking water meets health standards. During (compliance period), we (did not monitor or test or did not complete all monitoring or testing) for

(contaminant(s)), and therefore cannot be sure of the quality of your drinking water during that time.

c. For all public notices--standard language (where applicable), as specified below:

Please share this information with all the other people who drink this water, especially those who may not have received this notice directly (for example, people in apartments, nursing homes, schools, and businesses). You can do this by posting this notice in a public place or distributing copies by hand or mail.

E. Public notice to new billing units or customers.

1. For community waterworks the owner shall give a copy of the most recent public notice for any continuing violation, variance or exemption, or other ongoing situations requiring a public notice to all new billing units or new customers prior to or at the time service begins.

2. For noncommunity waterworks the owner shall continuously post the public notice in conspicuous locations in order to inform new consumers of any continuing violation, variance or exemption, or other situation requiring a public notice for as long as the violation, variance, exemption, or other situation persists.

F. Special notice of the availability of unregulated contaminant monitoring results.

1. The owner of a community waterworks or non-transient, noncommunity waterworks shall notify persons served by the system of the availability of the results of such sampling no later than 12 months after the monitoring results are known.

2. The special notice shall meet the requirements for a Tier 3 public notice and shall identify a person and telephone number to contact for information on the monitoring results.

G. Special notice for exceedance of the SMCL for fluoride.

1. Community waterworks that exceed the fluoride secondary maximum contaminant level (SMCL) of 2 mg/l, but do not exceed the primary maximum contaminant level (PMCL) of 4 mg/l for fluoride, shall provide public notice to persons served as soon as practical but no later than 12 months from the day the waterworks learns of the exceedance.

2. A copy of the notice shall be sent to all new billing units and new customers at the time service begins and to the engineering field office.

3. The owner shall repeat the notice at least annually for as long as the SMCL is exceeded.

4. If the public notice is posted, the notice shall remain in place for as long as the

SMCL is exceeded, but in no case less than seven days even if the exceedance is eliminated.

5. On a case-by-case basis, the commissioner may require an initial notice sooner than 12 months and repeat notices more frequently than annually.

6. The form and manner of the public notice (including repeat notices) shall meet the requirements for a Tier 3 public notice.

7. The public notice shall contain the following language, including the language necessary to fill in the blanks:

This is an alert about your drinking water and a cosmetic dental problem that might affect children under nine years of age. At low levels, fluoride can help prevent cavities, but children drinking water containing more than 2 milligrams per liter (mg/l) of fluoride may develop cosmetic discoloration of their permanent teeth (dental fluorosis). The drinking water provided by your community waterworks (name) has a fluoride concentration of (insert value) mg/l. Dental fluorosis, in its moderate or severe forms, may result in a brown staining and/or pitting of the permanent teeth. This problem occurs only in developing teeth, before they erupt from the gums. Children under nine should be provided with alternative sources of drinking water or water that has been treated to remove the excess fluoride to avoid the possibility of staining and pitting of their permanent teeth. You may also want to contact your dentist about proper use by young children of fluoride-containing products by young children. Older children and adults may safely drink the water. Drinking water containing more than 4 mg/l of fluoride (the U.S. Environmental Protection Agency's drinking water standard) can increase your risk of developing bone disease. Your drinking water does not contain more than 4 mg/l of fluoride, but we are required to notify you when we discover that the fluoride levels in your drinking water exceed 2 mg/l because of this cosmetic dental problem. For more information, please call (name of water system contact) of (name of community waterworks) at (phone number). Some home water treatment units are also available to remove fluoride from drinking water. To learn more about available home water treatment units, you may call NSF International at 1-877-NSF-HELP.

H. Special notice for nitrate exceedances above PMCL by noncommunity waterworks.

1. The owner of a noncommunity waterworks granted permission by the commissioner to exceed the nitrate PMCL shall provide public notice to persons served meeting the requirements for a Tier 1 notice.

2. The public notice shall be posted continuously and shall indicate the fact that nitrate levels exceed 10 mg/l and the potential health effects of exposure, meeting the requirements for Tier 1 public notice delivery and content.

I. The office may give notice to the public required by this section on behalf of the owner of the waterworks if the office complies with the requirements of this section.

However, the owner of the waterworks remains legally responsible for ensuring that the requirements of this section are met.

J. Within 10 days of completion of each initial and repeat public notice, the waterworks owner shall provide the appropriate field office:

1. A certification that he has fully complied with the public notice requirements; and

2. A representative copy of each type of notice distributed, published, posted and made available to the persons served by the waterworks and to the media.

K. The owner shall maintain copies of each public notice and certification for at least three years after issuance.

12 VAC 5-590-545. Consumer confidence reports.

A. Purpose and applicability.

1. Each community waterworks owner shall deliver to his customers an annual report that contains information on the quality of the water delivered by the waterworks and characterizes the risks, if any, from exposure to contaminants detected in the drinking water.

2. For the purpose of this section, customers are defined as billing units or service connections to which water is delivered by a community waterworks.

3. For the purpose of this section, a contaminant is detected when the laboratory reports the contaminant level as a measured level and not as nondetected (ND) or less than (<) a certain level. The laboratory's analytical and reporting procedures shall have been in accordance with 12 VAC 5-590-440; laboratory certification requirements of the Commonwealth of Virginia, Department of General Services, Division of Consolidated Laboratory Services; and consistent with current U. S. Environmental Protection Agency regulations found at 40 CFR Part 141.

B. Effective dates.

1. Each existing community waterworks owner shall deliver his report by July 1 annually.

2. The owner of a new community waterworks shall deliver his first report by July 1 of the year after its first full calendar year in operation and annually thereafter.

3. The owner of a community waterworks that sells water to a consecutive waterworks shall deliver the applicable information necessary to comply with the requirements contained in this section to the consecutive waterworks by April 1 annually, or on a date mutually agreed upon by the seller and the purchaser and specifically included in a contract between the parties.

C. Content.

1. Each community waterworks owner shall provide his customers an annual

report that contains the information on the source of the water delivered as follows:

a. Each report shall identify the source or sources of the water delivered by the community waterworks by providing information on:

(1) The type of the water (e.g., surface water, ground water); and

(2) The commonly used name, if any, and location of the body or bodies of water.

b. Where a source water assessment has been completed, the report shall:

(1) Notify consumers of the availability of the assessment;

(2) Describe the means to obtain the assessment; and

(3) Include a brief summary of the waterworks' susceptibility to potential sources of contamination.

c. The waterworks owner should highlight in the report significant sources of contamination in the source water area if such information is readily available.

2. For the purpose of compliance with this section, each report shall include the following definitions:

a. "Maximum contaminant level goal" or "MCLG" means the level of a contaminant in drinking water below which there is no known or expected risk to health. MCLGs allow for a margin of safety.

b. "Maximum contaminant level" or "MCL" means the highest level of a contaminant that is allowed in drinking water. MCLs are set as close to the MCLGs as feasible using the best available treatment technology.

c. A report for a community water system operating under a variance or an exemption issued by the commissioner under 12 VAC 5-590-140 and 12 VAC 5-590-150 shall include the following definition: "Variances and exemptions" means state or EPA permission not to meet an MCL or a treatment technique under certain conditions.

d. A report that contains data on contaminants that EPA regulates using any of the following terms shall include the applicable definitions:

(1) "Treatment technique" means a required process intended to reduce the level of a contaminant in drinking water.

(2) "Action level" means the concentration of a contaminant that, if exceeded, triggers treatment or other requirements that a water system must follow.

(3) "Maximum residual disinfectant level goal" or "MRDLG" means the level of a drinking water disinfectant below which there is no known or expected risk to health. MRDLGs do not reflect the benefits of the use of

disinfectants to control microbial contaminants.

(4) "Maximum residual disinfectant level" or "MRDL" means the highest level of a disinfectant allowed in drinking water. There is convincing evidence that addition of a disinfectant is necessary for control of microbial contaminants.

3. Information on detected contaminants.

a. This section specifies the requirements for information to be included in each report for the following contaminants:

(1) Contaminants subject to a PMCL, action level, maximum residual disinfectant level, or treatment technique as specified in 12 VAC 5-590-370;

(2) Unregulated contaminants subject to monitoring as specified in 12 VAC 5-590-370; and

(3) Disinfection byproducts or microbial contaminants, except Cryptosporidium, for which monitoring is required by Information Collection Rule (40 CFR 141.142 and 141.143 (7-1-97 Edition)), except as provided under subdivision 5 a of this subsection, and which are detected in the finished water.

b. The data relating to these contaminants shall be displayed in one table or in several adjacent tables. Any additional monitoring results that a community waterworks owner chooses to include in the report shall be displayed separately.

c. The data shall be derived from data collected to comply with EPA and state monitoring and analytical requirements during the calendar year preceding the year the report is due, except that:

(1) Where a waterworks owner is allowed to monitor for contaminants specified in subdivision 3 a (1) and (3) of this subsection less often than once a year, the table or tables shall include the date and results of the most recent sampling, and the report shall include a brief statement indicating that the data presented in the report are from the most recent testing done in accordance with the regulations. No data older than five years need be included.

(2) Results of monitoring in compliance with the Information Collection Rule (40 CFR 141.142 and 141.143 (7-1-97 Edition)) need only be included for five years from the date of last sample or until any of the detected contaminants becomes regulated and subject to routine monitoring requirements, whichever comes first.

d. For detected contaminants subject to a PMCL, action level, or treatment technique as specified in 12 VAC 5-590-370 and listed in Tables 2.1, 2.2

(Primary Maximum Contaminant Levels only), 2.3, 2.4 (Primary Maximum Contaminant Levels only), and 2.5, the table or tables must contain:

(1) The PMCL for that contaminant expressed as a number equal to or greater than 1.0 as provided in Appendix O, with an exception for beta/photon emitters. When the detected level of beta/photon emitters has been reported in the units of pCi/L and does not exceed 50 pCi/L, the report may list the PMCL as 50 pCi/L. In this case, the waterworks owner shall include in the report the following footnote: The PMCL for beta particles is 4 mrem/year. EPA considers 50 pCi/L to be the level of concern for beta particles;

(2) The MCLG for that contaminant expressed in the same units as the PMCL as provided in Appendix O;

(3) If there is no PMCL for a detected contaminant, the table must indicate that there is a treatment technique, or specify the action level, applicable to that contaminant, and the report shall include the definitions for treatment technique and/or action level, as appropriate, specified in subdivision 3 d of this subsection;

(4) For contaminants subject to a PMCL, except turbidity and total coliforms, the highest contaminant level used to determine compliance and the range of detected levels as follows:

(a) When compliance with the PMCL is determined annually or less frequently, the highest detected level at any sampling point and the range of detected levels expressed in the same units as the PMCL.

(b) When compliance with the PMCL is determined by calculating a running annual average of all samples taken at a sampling point, the highest average of any of the sampling points and the range of all sampling points expressed in the same units as the PMCL.

(c) When compliance with the PMCL is determined on a systemwide basis by calculating a running annual average of all samples at all sampling points, the average and range of detection expressed in the same units as the PMCL.

(5) For turbidity, the highest single measurement and the lowest monthly percentage of samples meeting the turbidity limits specified in 12 VAC 5-590-420 for the filtration technology being used. The report should include an explanation of the reasons for measuring turbidity;

(6) For lead and copper, the 90th percentile value of the most recent round of sampling and the number of sampling sites exceeding the action level;

(7) For total coliform:

(a) The highest monthly number of positive samples for waterworks collecting fewer than 40 samples per month;

(b) The highest monthly percentage of positive samples for systems collecting at least 40 samples per month;

(8) For fecal coliform, the total number of positive samples;

(9) The likely source or sources of detected contaminants. Specific information regarding contaminants may be available in sanitary surveys and source water assessments, and should be used when available to the waterworks owner. If the waterworks owner lacks specific information on the likely source, the report shall include one or more of the typical sources for that contaminant listed in Appendix O that are most applicable to the system.

e. If a community waterworks owner distributes water to his customers from multiple hydraulically independent distribution systems that are fed by different raw water sources:

(1) The table shall contain a separate column for each service area and the report shall identify each separate distribution system; or

(2) Waterworks owner shall produce a separate report tailored to include data for each service area.

f. The table or tables shall clearly identify any data indicating violations of PMCLs, MRDLs, or treatment techniques and the report shall contain a clear and readily understandable explanation of the violation including:

(1) The length of the violation;

(2) The potential adverse health effects using the relevant language of Appendix O; and

(3) Actions taken by the waterworks owner to address the violation.

g. For detected unregulated contaminants subject to monitoring as specified in 12 VAC 5-590-370 and listed in Tables 2.6 and 2.7, for which monitoring is required, the table or tables shall contain the average and range at which the contaminant was detected. The report may include a brief explanation of the reasons for monitoring for unregulated contaminants.

4. Information on Cryptosporidium, radon, and other contaminants:

a. If the waterworks has performed any monitoring for Cryptosporidium, including monitoring performed to satisfy the requirements of the Informational Collection Rule (40 CFR 141.143 (7-1-97 Edition)), which indicates that Cryptosporidium may be present in the source water or the finished water, the report shall include:

(1) A summary of the results of the monitoring; and

(2) An explanation of the significance of the results.

b. If the waterworks has performed any monitoring for radon which indicates that radon may be present in the finished water, the report shall include:

(1) The results of the monitoring; and

(2) An explanation of the significance of the results.

c. If the waterworks owner has performed additional monitoring that indicates the presence of other contaminants in the finished water, the report should include any results that may indicate a health concern, as determined by the commissioner. Detections above a proposed MCL or health advisory level may indicate possible health concerns. For such contaminants, the report should include:

(1) The results of the monitoring; and

(2) An explanation of the significance of the results noting the existence of a health advisory or a proposed regulation.

5. Compliance with other regulations.

a. In addition to the requirements of subdivision 3 f of this subsection the report shall note any violation that occurred during the year covered by the report of a requirement listed below.

(1) Monitoring and reporting of compliance data;

(2) Filtration and disinfection prescribed by 12 VAC 5-590-420. For waterworks owners who have failed to install adequate filtration or disinfection equipment or processes, or have had a failure of such equipment or processes which constitutes a violation, the report shall include the following language as part of the explanation of potential adverse health effects: Inadequately treated water may contain disease-causing organisms. These organisms include bacteria, viruses, and parasites, which can cause symptoms such as nausea, cramps, diarrhea, and associated headaches;

(3) Lead and copper control requirements prescribed by 12 VAC 5-590-370. For waterworks owners who fail to take one or more of the prescribed actions, the report shall include the applicable language of Appendix O for lead, copper, or both;

(4) Treatment techniques for Acrylamide and Epichlorohydrin prescribed by 12 VAC 5-590-420 G. For waterworks owners who violate the requirements of that section, the report shall include the relevant language from Appendix O;

(5) Recordkeeping of compliance data;

(6) Special monitoring requirements for unregulated contaminants

prescribed by 12 VAC 5-590-370 B 4 and for sodium;

(7) Violation of the terms of a variance, an exemption, or an administrative or judicial order.

b. The report shall contain:

(1) A clear and readily understandable explanation of the violation;

(2) Any potential adverse health effects; and

(3) The steps the waterworks owner has taken to correct the violation.

6. Variances and exemptions. If a system is operating under the terms of a variance or an exemption issued by the commissioner under 12 VAC 5-590-140 and 12 VAC 5-590-150, the report shall contain:

a. An explanation of the reasons for the variance or exemption;

b. The date on which the variance or exemption was issued;

c. A brief status report on the steps the waterworks owner is taking to install treatment, find alternative sources of water, or otherwise comply with the terms and schedules of the variance or exemption; and

d. A notice of any opportunity for public input in the review or renewal of the variance or exemption.

7. Additional information.

a. The report shall contain a brief explanation regarding contaminants, which may reasonably be expected to be found in drinking water including bottled water. This explanation shall include the exact language of subdivisions 8 a (1), (2) and (3) of this subsection or the waterworks owner shall use his own comparable language following approval by the commissioner. The report also shall include the exact language of subdivision 8 a (4) of this subsection.

(1) The sources of drinking water (both tap water and bottled water) include rivers, lakes, streams, ponds, reservoirs, springs, and wells. As water travels over the surface of the land or through the ground, it dissolves naturally occurring minerals and, in some cases, radioactive material, and can pick up substances resulting from the presence of animals or from human activity.

(2) Contaminants that may be present in source water include: (i) microbial contaminants, such as viruses and bacteria, which may come from sewage treatment plants, septic systems, agricultural livestock operations, and wildlife; (ii) inorganic contaminants, such as salts and metals, which can be naturally occurring or result from urban stormwater runoff, industrial or domestic wastewater discharges, oil and gas production, mining, or farming; (iii) pesticides and herbicides, which may come from a variety of sources such as agriculture, urban stormwater

runoff, and residential uses; (iv) organic chemical contaminants, including synthetic and volatile organic chemicals, which are byproducts of industrial processes and petroleum production, and can also come from gas stations, urban stormwater runoff, and septic systems; (v) radioactive contaminants, which can be naturally occurring or be the result of oil and gas production and mining activities.

(3) In order to ensure that tap water is safe to drink, EPA prescribes regulations that limit the amount of certain contaminants in water provided by public water systems. FDA regulations establish limits for contaminants in bottled water which must provide the same protection for public health.

(4) Drinking water, including bottled water, may reasonably be expected to contain at least small amounts of some contaminants. The presence of contaminants does not necessarily indicate that water poses a health risk. More information about contaminants and potential health effects can be obtained by calling the Environmental Protection Agency's Safe Drinking Water Hotline (800-426-4791).

b. The report shall include the telephone number of the waterworks owner, operator, or designee of the community waterworks as a source of additional information concerning the report.

c. In communities with a large proportion of non-English speaking residents, as determined by the commissioner, the report shall contain information in the appropriate language or languages regarding the importance of the report or contain a telephone number or address where such residents may contact the system to obtain a translated copy of the report or assistance in the appropriate language.

d. The report shall include the following information about opportunities for public participation in decisions that may affect the quality of the water. The waterworks owner should consider including the following additional relevant information:

(1) The time and place of regularly scheduled board meetings of the governing body which has authority over the waterworks.

(2) If regularly scheduled board meetings are not held, the name and telephone number of a waterworks representative who has operational or managerial authority over the waterworks.

e. The waterworks owner may include such additional information as he deems necessary for public education consistent with, and not detracting from, the purpose of the report.

D. Additional health information.

1. All reports shall prominently display the following language: Some people may be more vulnerable to contaminants in drinking water than the general

population. Immuno-compromised persons such as persons with cancer who are undergoing chemotherapy, persons who have undergone organ transplants, people with HIV/AIDS or other immune system disorders, some elderly, and infants can be particularly at risk from infections. These people should seek advice about drinking water from their health care providers. EPA/CDC guidelines on appropriate means to lessen the risk of infection by Cryptosporidium and other microbial contaminants are available from the Safe Drinking Water Hotline (800-426-4791).

2. A waterworks owner who detects arsenic at levels above 25 ug/l, but below the PMCL, shall include in his report the following informational statement about arsenic: EPA is reviewing the drinking water standard for arsenic because of special concerns that it may not be stringent enough. Arsenic is a naturally occurring mineral known to cause cancer in humans at high concentrations.

In lieu of the statement required in this subdivision, the waterworks owner may include his own educational statement after receiving approval from the commissioner.

3. A waterworks owner who detects nitrate at levels above 5 mg/l, but below the PMCL, shall include in his report the following informational statement about the impacts of nitrate on children: Nitrate in drinking water at levels above 10 ppm is a health risk for infants of less than six months of age. High nitrate levels in drinking water can cause blue baby syndrome. Nitrate levels may rise quickly for short periods of time because of rainfall or agricultural activity. If you are caring for an infant you should ask advice from your health care provider.

In lieu of the statement required in this subdivision, the waterworks owner may include his own educational statement after receiving approval from the commissioner.

4. A waterworks owner who detects lead above the action level in more than 5.0%, and up to and including 10%, of homes sampled shall include the following informational statement about the special impact of lead on children: Infants and young children are typically more vulnerable to lead in drinking water than the general population. It is possible that lead levels at your home may be higher than at other homes in the community as a result of materials used in your home's plumbing. If you are concerned about elevated lead levels in your home's water, you may wish to have your water tested and flush your tap for 30 seconds to two minutes before using tap water. Additional information is available from the Safe Drinking Water Hotline (800-426-4791).

In lieu of the statement required in this subdivision, the waterworks owner may include his own educational statement after receiving approval from the commissioner.

5. Community waterworks owners who detect TTHM above 0.080 mg/l, but below the PMCL, as an annual average shall include health effects language prescribed

by paragraph 73 of Appendix O.

E. Report delivery and recordkeeping.

1. Each community waterworks owner shall mail or otherwise directly deliver one copy of the report to each customer.

2. The waterworks owner shall make a good faith effort that shall be tailored to the consumers who are served by the system but are not bill paying customers, such as renters and workers. This good faith effort shall include at least one, and preferably two or more, of the following methods appropriate to the particular waterworks:

a. Posting the reports on the Internet;

b. Mailing to postal patrons in metropolitan areas;

c. Advertising the availability of the report in the news media;

d. Publication in a local newspaper;

e. Posting in public places such as libraries, community centers, and public buildings;

f. Delivery of multiple copies for distribution by single-biller customers such as apartment buildings or large private employers;

g. Delivery to community organizations.

h. Other methods as approved by the commissioner.

3. No later than July 1 of each year the waterworks owner shall deliver a copy of the report to the appropriate Virginia Department of Health, Environmental Engineering Field Office, followed within three months by a certification that the report has been distributed to customers and that the information in the report is correct and consistent with the compliance monitoring data previously submitted to the commissioner.

4. No later than July 1 of each year the waterworks owner shall deliver the report to any other agency or clearinghouse specified by the commissioner.

5. Each community waterworks owner shall make the report available to the public upon request.

6. The owner of each community waterworks serving 100,000 or more persons shall post the current year's report to a publicly accessible site on the Internet.

7. Each community waterworks owner shall retain copies of the report for no less than three years.

12 VAC 5-590-550. Recordkeeping.

All waterworks shall retain within their facilities or at a convenient location near their facilities the following records for the minimum time periods specified:

A. Bacteriological Records--Five years.

B. Chemical Analyses--10 years.

C. Individual filter monitoring required under 12 VAC 5-590-530 C 1 b (2)--Three years.

D. Results of Disinfection Profile including raw data and analysis--Indefinitely.

E. Disinfection Benchmarking including raw data and analysis--Indefinitely.

F. The following information shall be provided for subsections A and B of this section:

1. Date, place, and time of sampling as well as the name of the person who collected the sample;

2. Identification of sample (e.g., routine, check sample, raw water, other);

3. Date of analysis;

4. Laboratory and/or person responsible for performing analysis;

5. Analytical method/technique used; and

6. Results of the analysis.

G. Original records of all sampling data and analyses, reports, surveys, letters, evaluations, schedules, commissioner determinations, and any other information required by 12 VAC 5-590-420 C 1 and 2, D, E, and F; and 12 VAC 5-590-370 B 6 a, b, and c pertaining to lead and copper. Each waterworks owner shall retain the records required by this section for no fewer than 12 years.

H. Action taken to correct violations of these regulations--three years after last action with respect to violation involved.

I. Copies of reports, summaries, or communications relating to any sanitary surveys performed--10 years following inspection.

J. Variance or exemptions granted (and records related thereto)--five years following expiration of variance or exemption.

K. Cross connection control program records--10 years.

L. Systems that recycle flow, as stipulated in 12 VAC 5-590-420 K, must collect and retain on file recycle flow information for review and evaluation by the state beginning June 8, 2004. Information shall include, as a minimum:

1. Copy of the recycle notification submitted to the state under 12 VAC 5-590-530 I.

2. List of all recycle flows and the frequency with which they are returned.

3. Average and maximum backwash flow rate through the filters and the average and maximum duration of the filter backwash process, in minutes.

4. Typical filter run length and a written summary of how the filter run length is determined.

5. The type of treatment provided for the recycle flow.

6. Data on the physical dimensions of the equalization and/or treatment units, typical and maximum hydraulic loading rates, type of treatment chemicals used, average dose, frequency of use, and frequency at which solids are removed, if applicable.

M. All waterworks shall retain the following additional records:

1. Plant operational records.

2. Water well completion reports.

3. As-built engineering plans and specifications of facilities.

4. Shop drawings of major equipment.

5. Records of equipment repair or replacement.

6. Updated map of water distribution system.

7. All accident reports.

12 VAC 5-590-560. Safety.

Since its trained personnel is the waterworks' most important asset, an important phase of waterworks operation is the protection of personnel through an active safety program; therefore, it is strongly recommended that every waterworks institute a safety program.

12 VAC 5-590-570. Operational report forms.

All waterworks required to report information to the department shall use the forms approved by the division.

Article 3. Cross Connection Control and Backflow Prevention in Waterworks.

12 VAC 5-590-580. General.

The purpose of this article is to require as a condition for the issuance and continued use of the operation permit for the waterworks that each owner of a waterworks establish and enforce a program of cross connection control and backflow prevention for each waterworks. The cross connection control and backflow prevention program shall be approved by the division prior to issuance of the operation permit (see Appendix I).

12 VAC 5-590-590. Cross connections.

A. The purveyor shall not install, maintain, or allow to be installed a water service connection to any premises where cross connections to a waterworks or a consumer's water system may exist unless such cross connections are abated or controlled to the satisfaction of the water purveyor or the division.

B. The purveyor shall not install, maintain, or allow to be installed any connection whereby water from an auxiliary water system may enter a waterworks or consumer's water system unless the auxiliary water system and the method of connection and use of such system shall have been approved by the water purveyor and by the division.

12 VAC 5-590-600. Responsibilities.

A. General. Effective cross connection control requires the cooperation of the water purveyor, the building official, the consumer, the Virginia Department of Health, and the backflow prevention device tester.

B. Water purveyor.

1. The purveyor shall establish or cause to be established and operate a cross connection control and backflow prevention program consistent with the extent of the system and the type of consumer served. This program shall include at least one designated individual who shall be responsible for the inspection of the waterworks for cross connection and backflow prevention control. This program shall be carried out in accordance with the Uniform Statewide Building Code and shall be a continuing program.

2. Suggested elements of this program are contained in Appendix I. The purveyor has full responsibility for water quality and for the construction, maintenance, and operation of the waterworks beginning at the water source and ending at the service connection.

3. The purveyor shall have thorough inspections and operational tests made at least annually of backflow prevention devices which are required and installed at the service connection.

4. In the event of backflow of pollution or contamination into the waterworks, the

purveyor shall promptly take or cause corrective action to confine and eliminate the pollution or contamination. The purveyor shall immediately notify the division when backflow occurs.

5. The purveyor shall take positive action to ensure that the waterworks is adequately protected at all times. If a cross connection exists or backflow occurs into a consumer's water system or if the pressure in the waterworks is lowered below 10 psi gauge, the purveyor may discontinue the water service to the consumer and water service shall not be restored until the deficiencies have been corrected or eliminated to the satisfaction of the purveyor.

12 VAC 5-590-610. Containment policy.

A. An approved backflow prevention device shall be installed at each service connection to a consumer's water system where, in the judgment of the water purveyor or the division, a health, pollution, or system hazard to the waterworks exists.

B. When, as a matter of practicality, the backflow prevention device cannot be installed at the service connection, the device may be located downstream of the service connection but prior to any unprotected takeoffs.

C. A backflow prevention device shall be installed at each service connection to a consumer's water system serving premises where the following conditions exist:

1. Premises on which any substance is handled in such a manner as to create an actual or potential hazard to a waterworks (this shall include premises having sources or systems containing process fluids or waters originating from a waterworks which are no longer under the control of the water purveyor);

2. Premises having internal cross connections that, in the judgment of the water purveyor or the division, may not be easily correctable or have intricate plumbing arrangements which make it impracticable to determine whether or not cross connections exist;

3. Premises where, because of security requirements or other prohibitions or restrictions, it is impossible or impractical to make a complete cross connection survey;

4. Premises having a repeated history of cross connections being established or reestablished;

5. Premises having fire protection systems utilizing combinations of sprinklers, fire loops, storage tanks, pumps, antifreeze protection, or auxiliary water sources including siamese connections (fire loops and sprinkler systems with openings not subject to flooding, and containing no antifreeze or other chemicals, no separate fire protection storage, or auxiliary sources, will not normally require backflow prevention); and

6. Other premises specified by the division or the purveyor when cause can be shown that a potential cross connection hazard not enumerated above exists.

D. Premises having booster pumps connected to the waterworks shall be equipped with a low pressure regulating or cutoff device to shut off the booster pump when the pressure in the waterworks drops to a minimum of 10 psi gauge.

E. An approved backflow prevention device shall be installed at each service connection to a consumer's water system serving, but not necessarily limited to, the following types of facilities:

1. Hospitals, mortuaries, clinics, veterinary establishments, nursing homes, and medical buildings;

2. Laboratories;

3. Piers, docks, and waterfront facilities;

4. Sewage treatment plants, sewage pumping stations, or storm water pumping stations;

5. Food and beverage processing plants;

6. Chemical plants, dyeing plants and pharmaceutical plants;

7. Metal plating industries;

8. Petroleum or natural gas processing or storage plants;

9. Radioactive materials processing plants or nuclear reactors;

10. Car washes and laundries;

11. Lawn sprinkler systems, and irrigation systems;

12. Fire service systems;

13. Slaughter houses and poultry processing plants;

14. Farms where the water is used for other than household purposes;

15. Commercial greenhouses and nurseries;

16. Health clubs with swimming pools, therapeutic baths, hot tubs, or saunas;

17. Paper and paper products plants and printing plants;

18. Pesticide or exterminating companies and their vehicles with storage or mixing tanks;

19. Schools or colleges with laboratory facilities;

20. Highrise buildings (four or more stories);

21. Multiuse commercial, office, or warehouse facilities; and

22. Others specified by the purveyor or the division when reasonable cause can be shown for a potential backflow or cross connection hazard.

12 VAC 5-590-620. Type of protection required.

The type of protection required shall depend on the degree of hazard which exists or may exist and on the method of potential backflow. Backflow occurs either by back pressure or by back siphonage.

The degree of hazard, either high, moderate, or low, is based on the nature of the contaminant; the potential of the health hazard; the probability of the backflow occurrence; and the effect on waterworks structures, equipment, and appurtenances used in the storage, collection, purification, treatment, and distribution of pure water.

Table **(~~2.10~~ *2.15)*** shall be used as a guide to determine the degree of hazard for any situation.

A. Air gaps give the highest degree of protection and shall be used whenever practical to do so in high hazard situations subject to back pressure.

B. An air gap separation and a reduced pressure principle backflow prevention device will protect against back pressure when operating properly. Vacuum breakers will not protect against back pressure, but will protect against back-siphonage when operating properly.

C. Backflow prevention devices consisting of dual independent check valves with or without an intermediate atmospheric vent shall only be used in low hazard situations.

D. Barometric loops are not acceptable.

E. An interchangeable connection or change-over device has limitations which prevent its use where back pressure is present or may occur, the auxiliary supply is not an approved source, or the waterworks line pressure is less than 20 psi. Since this type connection is one of the easiest to bypass, the use of this type device will be approved only as a temporary and continuously supervised arrangement. In most instances, an approved device or method must be included and approved by the purveyor and division.

F. Reduced pressure principle type backflow preventers shall not be installed in pits or areas subject to flooding.

12 VAC 5-590-630. Backflow prevention devices.

A. Any backflow prevention device shall be of the approved type and shall comply with the Uniform Statewide Building Code.

B. Any backflow prevention device shall be installed in a manner approved by the water purveyor and in accordance with the Uniform Statewide Building Code.

C. Existing backflow prevention devices approved by the purveyor and the division prior to the effective date of this chapter shall, except for inspection, testing, and maintenance requirements, be excluded from the requirements of 12 VAC 5-590-600 A and B if the water purveyor and the division are assured that the devices will protect the waterworks.

TABLE **(~~2.10~~ *2.15)***. DETERMINATION OF DEGREE OF HAZARD

Premises with one or more of the following conditions shall be rated at the corresponding degree of hazard.

High Hazard
- The contaminant would be toxic, poisonous, noxious or unhealthy.
- A health hazard would exist.
- A high probability exists of a backflow occurrence either by back pressure or by back siphonage.
- The contaminant would disrupt the service of piped water for drinking or domestic use.
- Examples - sewage, used water, nonpotable water, auxiliary water systems, toxic or hazardous chemicals, etc.

Moderate Hazard
- The contaminant would only degrade the quality of the water aesthetically or impair the usefulness of the water.
- A health hazard would not exist.
- A moderate probability exists of a backflow occurrence either by back pressure or by back siphonage.
- The contaminant would not seriously disrupt service of piped water for drinking or domestic use.
- Examples - Food stuff, nontoxic chemicals, nonhazardous chemicals, etc.

Low Hazard
- The contaminant would only degrade the quality of the water aesthetically.
- A health hazard would not exist.
- A low probability exists of the occurrence of backflow primarily by back siphonage.
- The contaminant would not disrupt service of piped water.
- Examples - food stuff, nontoxic chemicals, nonhazardous, chemicals, etc.

PART III. MANUAL OF PRACTICE FOR WATERWORKS DESIGN.

Article 1. General.

12 VAC 5-590-640. General.

Waterworks shall conform with the Public Water Supply Law, Article 2 of Chapter 6 of Title 32.1 of the Code of Virginia. The engineer shall confer with the division before proceeding with the detailed designs. The engineering report and preliminary plan shall include plant site selection. Ordinarily, waterworks shall be designed to provide for the estimated population 10 to 30 years hence under predicted growth conditions. All waterworks shall be designed so that they can readily be increased in capacity except where circumstances preclude the probability of expansion. Expansion by modular steps should be considered. Operation and maintenance manuals are required for treatment facilities and pumping facilities.

12 VAC 5-590-650. Objectives of a waterworks.

A. The objectives of a waterworks are:

1. The production of pure water; and

2. The production of water appealing to the consumer.

B. To reach the objectives of a waterworks, finished water quality shall conform with Article 1 of Part II of this chapter.

12 VAC 5-590-660. Site location.

A. Wells and water treatment plants shall be located above the projected 100 year flood-plain elevation. Lower elevations may be considered if it can be adequately shown that the wells or treatment plants can be protected from flooding. Springs subject to flooding shall not be approved.

B. The waterworks shall be readily accessible in all seasons.

C. Consideration should be given to the convenience of transportation facilities to the plant site and also to the availability of electric power from more than one source of outside power.

12 VAC 5-590-670. Site size.

A. The area reserved around a well or spring site shall conform with 12 VAC 5-590-820, 12 VAC 5-590-830, and 12 VAC 5-590-840.

B. The treatment plant site shall be of ample size to accommodate expansion, and ample space shall be provided at the treatment site for adequate disposal of treatment plant wastes.

C. The disposal of water treatment plant wastes shall conform to the State Water Control Law, Chapter 3.1 of Title 62.1 of the Code of Virginia.

12 VAC 5-590-680. Treatment process selection.

The following shall be considered when selecting processes to achieve treatment goals:

A. The quality and variability of the source water.

B. Possible future changes in the quality of the source.

C. Water quality goals, including the growing desire of the public for better water.

D. When removal of contaminants for which BAT has been specified is necessary, processes classified as BAT shall be employed.

E. When treatment technique requirements have been established in lieu of MCLs, processes specified by such requirements shall be employed.

F. POE or POU devices shall not be utilized for long-term compliance with PMCLs. Such devices may be considered for short term, interim use, as a condition of a variance or exemption issued by the commissioner.

12 VAC 5-590-690. Capacity of waterworks.

The design capacity of the waterworks shall exceed the maximum daily water demand of the system. Waterworks shall normally be designed on the following basis of water consumption. If deviations are made, they shall be based on sound engineering knowledge substantiated in the designer's report and approved by the division.

A. Daily water consumption rates (annual daily water demand):

Dwellings, per person	100 gpd
High schools with showers, per person	16 gpd
Elementary schools without showers, per person	10 gpd
Boarding schools, per person	75 gpd
Motels at 65 gallons per person, minimum per room	130 gpd
Trailer courts at three persons per trailer, per trailer	300 gpd
Restaurants, per seat	50 gpd
Interstate or through highway restaurants, per seat	180 gpd
Interstate rest areas, per person	5 gpd
Service stations, per vehicle served	10 gpd
Factories, per person, per eight-hour shift	15-35 gpd
Shopping centers, per 1,000 sq.ft. of ultimate floor space	200-300 gpd
Hospitals, per bed	300 gpd
Nursing homes, per bed	200 gpd

Home for the aged, per bed	100 gpd
Doctor's office in medical center	500 gpd
Laundromats, 9 to 12# machines, per machine	500 gpd
Community colleges per student and faculty member	15 gpd
Swimming pools, per swimmer	10 gpd
Theaters, drive-in type, per car	5 gpd
Theaters, auditorium type, per seat	5 gpd
Picnic areas, per person	5 gpd
Camps, resort, day and night with limited plumbing, per camp site	50 gpd
Picnic areas, per person	5 gpd
Luxury Camps with flush toilets, per camp site	100gpd

B. Minimum acceptable effective finished water storage for domestic purposes shall not be less than 200 gallons per equivalent residential connection at minimum pressure.

C. All waterworks shall provide at least a minimum working (under flow) pressure of 20 psi at the service connection based on the greater of maximum hour or maximum day plus applicable fire flows. Applicable fire flows shall be selected by coordination between the water supply owner, design consultant, local officials and local fire marshall. When the number of residential units is less than 1,000, the formula $Q=11.4N^{0.544}$; is acceptable for estimating maximum hour domestic demand flow, where Q=total gallons per minute and N=total number of residential units. The division can require a higher design pressure if indicated by site conditions.

D. A waterworks utilizing wells as the sole source of supply shall provide source capacity of a minimum of 0.5 gallons per minute per equivalent residential connection.

E. Waterworks serving 50 or more residential connections with wells as the source of supply shall provide at least two water sources which do not hydraulically interfere with another source of public water supply. Consideration shall be given to requiring each source to be of a minimum yield so its reliability is realistic. The secondary well should be rated at 20% of the waterworks capacity as a minimum.

F. Waterworks serving less than 50 residential connections with wells as the source of supply shall provide or have access to an auxiliary pump stored or stocked locally or they shall provide 48 hours of total effective storage volume based on water usage.

12 VAC 5-590-700. Metering total water production.

A. Waterworks providing chlorination only shall meter the water prior to treatment.

B. Waterworks providing iron or manganese removal, or both, shall meter the water prior to treatment.

C. Waterworks providing softening by ion exchange shall meter all water treated and total water delivered to the distribution system.

D. Waterworks providing turbidity removal or softening by precipitation, or both, shall meter the water prior to and subsequent to treatment.

E. All waterworks shall provide metering of total water production.

12 VAC 5-590-710. Site layout.

A. Functional aspects of site layout shall be considered.

B. Site grading shall be provided.

C. Adequate site drainage shall be provided.

D. Walks shall be provided.

E. Access roads shall be provided.

F. Driveways shall be provided.

12 VAC 5-590-720. Building layout.

A. Adequate ventilation shall be provided.

B. Adequate lighting shall be provided.

C. Adequate heating shall be provided.

D. Adequate drainage shall be provided.

E. Adequate dehumidification equipment shall be provided.

F. Accessibility of equipment for operation, servicing, and removal shall be provided.

G. Flexibility of operation shall be provided.

H. Safety precautions shall be considered. Reference the applicable health and safety standards of the Virginia Department of Labor and Industry for the appropriate requirements.

I. Convenience of operation shall be considered.

J. Separate rooms for chemical storage and feed equipment to reduce dust problems shall be considered.

K. Sanitary facilities shall be provided at all waterworks installations requiring an operator in attendance at all times during operation.

L. Positive identification of the contents of a piping system shall be by lettered legend giving the name of the contents. Arrows should be used to indicate the direction of flow. Legends shall be applied close to valves, adjacent to changes in direction and branches, where pipes pass through walls and floors, and at frequent intervals on straight pipe runs. The lettering shall be of such color, size, and location so as to be clearly visible and readable.

M. No conduit or basin containing filtered water shall have a common division wall with another conduit or basin containing nonpotable water. Vertical double division walls, where separated sufficiently to permit ready access for inspection, are permissible where the division walls are monolithic in construction and are properly keyed into their footings or are cast monolithically with their footings.

12 VAC 5-590-730. Standby power capability.

Standby power capability may be required by the division so that water may be treated or pumped, or both, to the distribution system in order to maintain a minimum level of service during an emergency.

12 VAC 5-590-740. Maintenance and servicing of equipment.

Adequate facilities must be provided for the maintenance and servicing of automatic equipment.

12 VAC 5-590-750. Shop space and storage.

Adequate facilities should be included for shop space and storage consistent with the designed facilities.

12 VAC 5-590-760. Laboratory.

Laboratory equipment and facilities shall be compatible with the raw water source, intended design of the water treatment plant, and the complexity of the water treatment involved.

A. Testing equipment provided shall be adequate for the purpose intended and recognized procedures must be utilized.

B. Sufficient bench space, adequate ventilation, adequate light, storage room, laboratory sink, and auxiliary facilities shall be provided. Office space is not included in the following specified laboratory sizes:

1. Waterworks providing iron or manganese removal, or softening by ion exchange should provide a laboratory with a minimum of 64 square feet of floor area and 20 square feet of bench area.

2. Waterworks providing turbidity removal or softening by precipitation, or both, should provide a laboratory with a minimum of 200 square feet of floor area and 65 square feet of bench area.

3. Waterworks providing turbidity removal or softening by precipitation, or both, and in-plant bacteriological analysis should provide a laboratory with a minimum of 300 square feet of floor area and 100 square feet of bench area.

C. When a bacteriological laboratory is required a separate room of adequate space shall be provided.

12 VAC 5-590-770. Sample taps.

Sample taps shall be provided so that water samples can be obtained from each

water source. At waterworks providing treatment, sample taps shall be provided from each unit operation of treatment, with the taps being located at the master control sink in the laboratory. Taps shall be consistent with sampling needs and shall not be of the petcock type.

12 VAC 5-590-780. Wall castings.

Consideration shall be given to providing extra wall castings built into the structure to facilitate expansion and future uses wherever pipes pass through walls of concrete structures.

12 VAC 5-590-790. Water supply service.

The water supply service for treatment facilities shall be taken from a point after there has been thorough mixing of all chemicals added to the water.

12 VAC 5-590-800. Disinfection.

All pipes, tanks, and equipment which can convey or store potable water shall be disinfected prior to being placed in service. Plans and specifications shall outline the procedures and include the disinfectant dosage, contact time, and method of testing the results of the procedure.

1. Forms of chlorine for disinfection.

a. Liquid chlorine. The use of liquid chlorine shall be acceptable only when suitable equipment is available and only under the direction of a person trained to handle liquid chlorine. Emergency handling equipment shall be provided.

It will normally require 4.2 lbs. of liquid chlorine (supplied under pressure in steel containers) to produce a concentration of 50 mg/L of available chlorine in 10,000 gallons of water.

b. Calcium hypochlorite. Granular and tablet forms are available (both with 65% available chlorine). It will normally require 6.5 lbs. of calcium hypochlorite to produce a concentration of 50 mg/L of available chlorine in 10,000 gallons of water.

c. Sodium hypochlorite. This is supplied in strengths of 5.25% to 16% available chlorine. The required amount of sodium hypochlorite to produce a 50 mg/L concentration of available chlorine in 10,000 gallons of water can be calculated from the following formula:

$$\frac{50}{\text{\% available chlorine}}$$

2. Methods of disinfection other than chlorination may be considered by the division on a case-by-case basis.

3. Testing of water following disinfection:

a. All chlorine residual determinations shall be made using only those methods approved by the division; and

b. Two water samples for bacteriological analysis must be collected at least 24 hours apart and analyzed by a certified laboratory. The results of these samples must indicate no coliform contamination before the pipe, tanks, or equipment can be utilized as part of the waterworks. If contamination is indicated, then the disinfection procedure must be repeated.

12 VAC 5-590-810. Paints, coatings, sealers, or liners.

Paints, coatings, sealers or liners which contact raw, partially treated, or potable water and are used in pipes, tanks, or equipment which can convey or store these waters shall be approved by the division before application.

Article 2. Source Development.

12 VAC 5-590-820. General.

Preference shall be given to the best available sources of supply which present minimal risks of contamination from wastewaters and which contain a minimum of impurities that may be hazardous to health. In all cases, sources shall be selected and maintained on a basis which will assure that the water is continuously amenable to available treatment processes. In selecting the source of water to be developed, the designing engineer must prove to the satisfaction of the division that the water which is to be delivered to the consumers will meet the current requirements of the board with respect to bacteriological, physical, chemical and radiological qualities. All water samples for chemical, physical and radiological analyses must be submitted to the Commonwealth of Virginia, Department of General Services, Division of Consolidated Laboratory Services or to a testing laboratory certified by the Division of Consolidated Laboratory Services. All bacteriological analyses must be performed at laboratories in accordance with analysis 12 VAC 5-590-370 A and 12 VAC 5-590-480 B 2.

12 VAC 5-590-830. Surface water sources; quantity; quality; development structures.

A. A surface water source includes all tributary streams and drainage basins, natural lakes, and artificial reservoirs or impoundments above the point of water supply intake.

1. The quantity of water at the source shall:

a. Be adequate to supply the water demand of the service area;

b. Provide a reasonable surplus for anticipated growth; and

c. Be adequate to compensate for all losses, including evaporation, seepage, flow-by requirements, etc.

2. The safe yield of the source shall be determined as follows:

a. Simple intake (free-flowing stream). The safe yield is defined as the minimum withdrawal rate available during a day and recurring every 30 years (30 year - one day low flow). To generate the report for this, data is to be used to illustrate the worst drought of record in Virginia since 1930. If actual gauge records are not available for this, gauges are to be correlated from similar watersheds and numbers are to be synthesized; and

b. Complex intake (impoundments in conjunction with streams). The safe yield is defined as the minimum withdrawal rate available to withstand the worst drought of record in Virginia since 1930. If actual gauge records are not available, correlation is to be made with a similar watershed and numbers synthesized in order to develop the report.

Note: Local governments may request this aid from the State Water Control

Board (SWCB) by contacting either the Health Department's Office of Water Programs or the SWCB's headquarters office in Richmond.

B. The owner shall conduct, or have conducted, a sanitary survey and a study of the factors, both natural and man-made, which will affect the quality of the water at the source. The results of the sanitary survey shall be submitted to the division. Such survey and study shall include, but shall not be limited to:

1. Obtaining samples over a sufficient period of time to assess the bacteriological, physical, chemical, and radiological characteristics of the water;

2. Determining future uses and effects of impoundments or reservoirs;

3. Determining the degree of control over the watershed that may be exercised by the owner; and

4. Assessing degree of hazard to the source by possible spillage of materials that may be toxic, harmful, or detrimental to treatment processes.

C. Intake structures shall provide for:

1. Withdrawal of water from at least three levels in impoundments or reservoirs. Withdrawal of water from more than one level may be required in run-of-the stream intakes if the quality varies with depth;

2. Separate facilities for release of less desirable water held in storage;

3. Screens on intake ports with provisions for adequate cleaning;

4. Prevention of flooding of access walkways and control valves of intakes on multiple purpose reservoirs; and

5. Velocity of flow through inlet structure such that frazil ice will be held to a minimum.

D. A detention reservoir is a structure into which water is stored for pretreatment to improve water quality prior to other treatment. Where a detention reservoir is required, the development shall assure that:

1. Water quality is protected by controlling runoff into reservoir;

2. Dikes are structurally sound and protected against wind action and erosion;

3. Point of influent flow is separated from the point of withdrawal; and

4. Sufficient detention time is provided in the reservoir as recommended by the designer and approved by the division.

E. In order to protect the public health and guarantee a supply of pure water, terminal reservoirs shall not be utilized for body contact recreation and boats powered by gasoline engines. Large terminal reservoirs may be used for body contact recreation and boats powered by gasoline engines provided a buffer zone acceptable to the division and water purveyor is furnished. Site preparation shall include but not be limited to the removal of brush and trees to the high water elevation, and protection from floods

during construction.

12 VAC 5-590-840. Groundwater sources.

A. A groundwater source includes all water obtained from drilled wells and springs. Wells and springs should be protected from contamination during construction. All public water supply wells shall be constructed by registered Virginia contractors. All wells shall be constructed in a manner to protect groundwater resources by preventing contaminated water or water having undesirable physical, chemical, or radiological characteristics from entering potable water aquifers. All groundwater sources must be analyzed for chemical, physical, radiological and bacteriological quality in order to determine treatment requirements. Groundwater containing total coliform concentrations of less than 100 and more than three organisms per 100 milliliters based on the geometric mean of 20 or more samples shall be disinfected. Groundwater containing total coliform concentrations of 100 or more organisms per 100 milliliters based on the geometric mean of 20 or more samples constitutes unacceptable contamination for disinfection only. Groundwater with widely fluctuating or increasing bacteriological results may be determined by the division to be unsuitable for disinfection treatment alone.

The class of well to be constructed shall be determined by the division. All well lot, well location, and well construction requirements contained in this section may be varied by the division as specific geologic and site conditions dictate.

1. Minimum well lot requirements:

a. The well lot shall provide a distance of at least 50 feet from the well to all property lines of the well lot. Larger well lots may be required under certain conditions. Fencing of the well lot may be required under certain conditions;

b. If the well lot does not adjoin a public road, an all-weather access road shall be provided and recorded as part of the well lot;

c. The well lot shall be graded to divert surface runoff away from the well and to prevent ponding on the well lot;

d. The well lot or lots must be located by a survey, and a plat plan prepared. The final plat plan must agree with the preliminary plat plan with respect to size and boundaries of the lot or lots selected for well or wells. One of the following must be submitted:

(1) A copy of the plat plan showing that it has been duly recorded and signed by the clerk of the circuit court for the jurisdiction where the well is located and giving the deed book and page number and date of recording will be required before a construction permit can be issued or

(2) If the well lot is identified on a recorded plan of the subdivision as a well lot, then this is acceptable, if recorded as indicated in subdivision A 1 d (1) above; and

e. In addition, a dedication document duly recorded with the clerk of the circuit court must be furnished stating that the well lot shall be used only for waterworks appurtenances as long as this lot is utilized as part of a waterworks.

2. Minimum well location requirements:

a. The horizontal distance from the well to any septic tank, purification field, pit privy, cesspool, barnyard, hog lot, or source of similar contamination, as well as all surface runoff from such actual or potential sources of contamination, shall be at least 50 feet;

b. The horizontal distances from the well to any pipe carrying sewage or pipe in which sewage can back up shall be at least 50 feet; and

c. The horizontal distance from the well to any petroleum or chemical storage tank or pipe line or similar source of contamination shall be at least 50 feet, except that where plastic type well casing is used, the separation distance shall be at least 100 feet. This 100-foot separation may be obtained by an enlarged well lot, easements, deed restrictions, or other equivalent legal means.

3. Minimum construction requirements for Class I wells:

a. The well shall be drilled and cased to a depth sufficient to exclude undesirable groundwater, but in no case shall the casing be less than 100 feet in depth;

b. The diameter of the drill hole to the depth required above shall be at least three inches greater than the outside diameter of the couplings of the casing to be used; and

c. The annular space around the casing shall be grouted to a depth of at least 100 feet in a manner satisfactory to the division. When the outer casing cannot be removed, the annular spacing between the drill hole and the outer casing shall also be sealed in a manner approved by the division.

4. Minimum construction requirements for Class II wells. This classification includes two types of construction, either of which is acceptable:

a. Type A wells in which the annular space around the casing is grouted a minimum of 20 feet from the surface:

(1) The well shall be drilled and cased to a depth of at least 100 feet; and

(2) The cased drill hole shall pass through at least the first 50 feet of unconsolidated formation such as caving sand, gravel or other material that will collapse against the casing;

b. Type B wells in which the annular space around the casing is grouted:

(1) The well shall be drilled and cased to a depth sufficient to exclude

undesirable groundwater, but in no case shall the casing be less than 50 feet in length;

(2) The diameter of drill hole to the depth required above shall be at least three inches greater than the outside diameter of the couplings of the casing to be used;

(3) The lower end of the enlarged portion of the drill hole should terminate in solid rock or other impervious formation when practical to do so; and

(4) The annular space around casing shall be grouted to a depth of at least 50 feet in a manner satisfactory to the division. When the outer casing cannot be removed the annular spacing between the drill hole and the outer casing shall be sealed in a manner approved by the division.

B. General well development requirements:

1. Water used in well construction shall be from a satisfactory water source or from the well under construction.

2. Casing and liner pipe:

a. Shall be metallic pipe meeting ASTM, ANSI, AWWA or API specifications and standards applicable to wells. Dimensions shall conform to the following table:

STEEL PIPES

SIZE (inches)	DIAMETER (inches)		THICKNESS (inches)	WEIGHT PER FOOT (pounds)	
	External	Internal		Plain Ends	With Threads and Couplings
4 id	4.5	4.026	0.237	10.79	11.0
6 id	6.625	6.065	0.280	18.97	19.18
8	8.625	7.981	0.322	28.55	29.35
10	10.750	10.020	0.365	40.48	41.85
12	12.750	12.000	0.375	49.56	51.15
14 od	14.000	13.250	0.375	54.57	57.00
16	16.000	15.250	0.375	62.58	65.30
18	18.000	17.250	0.375	70.59	73.00
20	20.000	19.250	0.375	78.60	81.00
22	22.000	21.000	0.500	114.81	

24	24.000	23.000	0.500	125.49	
26	26.000	25.000	0.500	136.17	
28	28.000	27.000	0.500	146.85	
30	30.000	29.000	0.500	157.53	
32	32.000	31.000	0.500	168.21	
34	34.000	33.000	0.500	178.89	
36	36.000	35.000	0.500	189.57	

b. Plastic pipes may be approved following investigation by the division. The casing shall be PVC type 1120 (cell identification 12454), NSF approved for well casings meeting appropriate ASTM, ANSI, AWWA or API specifications and used to depths in conformance with the information contained in the following tables:

Maximum Allowable Depths of Installation of Polyvinyl Chloride (PVC) Thermoplastic Water Well Casing

Type 1120 (12454)

Schedule Number	Nominal Diameter of PVC 1120								
	2"	2.5"	3"	3.5"	4"	5"	6"	8"	10"
40-	560'	740'	485'	265'	291'	194'	143'	99'	74'
80-	1750'	2040'	1380'	1085'	912'	646'	395'	400'	340'

SDR No.	All Diameters of PVC 1120
SDR 41	25'
SDR 32.5	50'
SDR 26	108'
SDR 21	212'
SDR 17	413'
SDR 13.5	868'

c. Heavy weight casing pipe may be required under certain geologic and hydrostatic conditions; and

d. Where corrosive conditions exist, materials such as coated casings, stainless steel, bronze, or plastic may be used as casings or linings subject to

approval by the division.

3. Packers or other well construction materials shall be of a material that will not impart taste, odors, toxic substances, or bacterial contamination to the water in the well. No lead is to be used in packers, flux, piping, etc.

4. Screens, where required, shall:

a. Be constructed of material which will not be damaged by chemical action of groundwater or future cleaning operations;

b. Have size of openings to be based on sieve analysis and should be adequate to pass flows at a velocity of 0.1 foot per second or less; and

c. Be installed so that exposure above the pumping level will not occur.

5. A water well completion report shall:

a. Be submitted to the division, the State Water Control Board and the owner; and

b. Provide all data requested on the most recent well completion form.

6. The yield and drawdown test data over a 48-hour minimum period shall be provided; however, in those areas where geologic conditions warrant, the required test period may be varied by the division.

7. Chemical conditioning shall be included in specifications as to method, equipment, chemicals, testing for residual chemicals, disposal of waste, and inhibitors used.

8. Grouting requirements.

a. Neat cement grout is normally required and shall consist of cement (API Spec. 10, Class G cement or Class B similar to ASTM C150 TYPE II) and water with not more than six gallons of water per 94-pound sack of cement, and shall be in place within 48 hours of well construction. A maximum of 6.0%, by weight, bentonite and 2.0%, by weight, calcium chloride, may be added. NOTE: When exceptional conditions require the use of a less fluid grout to bridge voids, a mixture of cement (ASTM C150 TYPE II), sand and water in the proportion of not more than two parts by weight of sand to one part of cement with not more than six gallons of clean water per 94 pound sack of cement may be used if approved by the division;

b. Application.

(1) Grout shall be installed by means of continuous pressure grouting from the bottom of the annular opening upward in one continuous operation until the annular opening is filled.

(2) Sufficient annular opening shall be provided to permit a minimum of 1 1/2 inches of grout around the protective casing, including couplings, if used.

(3) Prior to grouting, bentonite, Aquagel, or similar approved materials may be added to the annular opening, in the manner indicated for grouting; and

c. Protective casing shall be provided with sufficient centralizers attached to the casing to permit unobstructed flow and uniform thickness of the grout.

9. Plumbness and alignment:

a. Every well shall be tested for plumbness and alignment;

b. The test method shall be clearly stated in specifications; and

c. Excessive kinks and bends shall not be acceptable.

10. Watertight welded metal plates, set screw caps, or screw-on caps are acceptable for temporarily capping a well until the pumping equipment is installed.

11. Bacteriological quality:

a. Every new, modified, or reconditioned groundwater source shall be disinfected after placement of the final pumping equipment; and

b. A series of nine consecutive negative samples for bacteriological examination or a series of 20 or more samples for most probable number (MPN) examination is required.

12. Samples for chemical, physical and radiological analyses shall be submitted on every new, modified, or reconditioned well. The sample must be collected near the end of the pumping test and after the well water has cleared.

13. Observation wells:

a. Shall be constructed in accordance with the requirements for permanent wells if they are to remain in service after completion of the groundwater study; and

b. Shall be protected at the upper terminal to preclude entrance of contamination.

14. Well abandonment:

a. Observation wells and groundwater sources which are not in use shall be sealed by methods which will restore the controlling geological conditions which existed before they were constructed;

b. Temporary abandonment.

(1) Any water well temporarily removed from service, or completed but not put into service, shall be sealed with a watertight cap or well-head seal.

(2) Such well shall be so maintained that it will not be a source or channel of contamination during temporary abandonment; and

c. Permanent abandonment.

(1) All casing and screen materials may be salvaged.

(2) The well shall be checked from land surface to the entire depth of the well before it is plugged to ascertain freedom from obstructions that may interfere with plugging (sealing) operations.

(3) The well shall be thoroughly chlorinated prior to plugging (sealing).

(4) Bored wells shall be completely filled with cement grout or dry clay compacted in place.

(5) Wells constructed in unconsolidated formations shall be completely filled with cement grout or clay slurry by introduction through a pipe initially extending to the bottom of the well. Such pipe shall be raised, but remain submerged in grout, as the well is filled.

(6) Wells constructed in consolidated rock formations or which penetrate zones of consolidated rock may be filled with sand or gravel opposite the zones of consolidated rock. The top of the sand or gravel fill shall be at least five feet below the top of the consolidated rock. The remainder of the well shall be filled with sand-cement grout only.

15. All zones containing water of undesirable quality or zones to be protected but excluded from final well completion shall be grouted from a point at least five feet above the zone to a point at least five feet below the zone.

C. Special requirements for various groundwater sources:

1. Gravel packed wells:

a. The gravel utilized shall be free of foreign material, properly sized, washed, and then disinfected prior to or during placement;

b. The gravel refill pipes, when used, shall be incorporated within the pump foundation or concrete apron and terminated with screwed or welded caps at least 12 inches above the pumphouse floor or concrete apron;

c. Gravel refill pipes in the grouted annular opening shall be surrounded by a minimum of 1 1/2 inches of grout.

d. Means for the prevention of leakage of grout into the gravel pack of the screen shall be provided; and

e. The minimum protective casing and grouted depth shall be acceptable to the division.

2. Radial water collectors will be considered on an individual basis by the division.

3. Multiple aquifer wells. The annular space between producing aquifers should be grouted to prevent the mixing of waters of different qualities (see subdivision

B 15). An approved bentonite material specifically manufactured as a grout may be considered.

4. Flowing artesian wells will be considered on an individual basis by the division.

5. Springs:

a. Springs may be considered only when it is not possible to develop an acceptable well or other source;

b. Springs may be approved only after an extensive sanitary survey and bacteriological, turbidity, chemical, and flow data over a time period sufficient to establish year-round quality and quantity. The amount of land required for protection of the spring shall be determined by the division on a case-by-case basis;

c. Springs shall be considered as surface water sources if they are influenced by surface conditions. Indicators of such influence include turbidity, bacteriological, and chemical quality that varies with surface conditions;

d. Springs shall be protected from entry of surface water;

e. Springs shall be housed in a permanent structure; and

f. Springs shall be continuously chlorinated.

Article 3. Processes and Devices.

12 VAC 5-590-850. General.

The design of treatment processes and devices shall depend upon the evaluation of the nature and quality of the particular water to be treated and the desired quality of the finished water as set forth in Article 1 of Part II, Drinking Water Standards, and Article 2 of Part III, Source Development. All surface water shall receive treatment by chemical addition for coagulation, flocculation, clarification, filtration, and disinfection unless otherwise approved by the division. Some types of treatment processes may require presedimentation. Operation and maintenance manuals are required.

12 VAC 5-590-860. Chemical application.

Only chemicals authorized in the construction permit or subsequently authorized by the division and in compliance with National Sanitation Foundation Standards 60 and 61 shall be used to treat drinking water or as an additive to drinking water.

A. Plans and specifications shall be submitted for review and approval, as provided for in Part I, and shall include:

1. Descriptions of feed equipment, including maximum and minimum feed ranges;

2. Location of feeders, piping layout, and points of application;

3. Storage and handling facilities;

4. Specifications for chemicals to be used;

5. Operating and control procedures; and

6. Descriptions of testing equipment and procedures.

B. Chemicals shall be applied to the water at such points and by such means as to:

1. Assure maximum efficiency of treatment;

2. Provide maximum protection to the consumer;

3. Provide maximum safety to operators;

4. Assure satisfactory mixing of the chemicals with the water;

5. Provide maximum flexibility of operation through various points of application, when appropriate;

6. Prevent backflow or back-siphonage between multiple points of feed through common manifolds; and

7. Provide for the application of pH-affecting chemicals to the raw water prior to the addition of the coagulant in turbidity removal processes.

C. Feed equipment.

1. Where chemical feed is necessary for the treatment of the supply, such as chlorination, coagulation or other essential processes:

a. A minimum of two feeders shall be provided; and

b. A standby unit or combination of units of sufficient capacity shall be available to replace the largest unit during shutdowns.

2. Feeders shall be of such design and capacity to meet the following requirements:

a. Feeders shall be able to supply at all times the necessary amounts of chemical at an accurate rate throughout the range of feed;

b. Proportioning of chemical feed to the rate of flow shall be provided where the water flow is not constant;

c. Positive displacement type solution feed pumps, or gravity feed through rotometers, shall be used to feed liquid chemicals, but should not normally be used to feed chemical slurries; and

d. Chemical solutions shall be prevented from being siphoned into the water supply by:

(1) Providing vacuum relief,

(2) Providing a suitable air gap, or

(3) Other approved devices or piping arrangements;

e. The service water supply shall be protected from contamination by chemical solutions by:

(1) Equipping the supply line with backflow or back-siphonage prevention devices or

(2) Providing an air gap between supply line and solution tank;

f. Chemical contact materials and surfaces shall be resistant to the aggressiveness of the chemical solution;

g. Dry chemical feeders shall:

(1) Measure chemicals volumetrically or gravimetrically;

(2) Provide effective solution of the chemical in the solution pot;

(3) Preferably provide gravity feed from solution pots; and

(4) Completely enclose chemicals to prevent emission of dust to the operation room;

h. No direct connection may exist between any sewer and a drain or overflow from the feeder or solution chamber or tank; and

i. A separate chemical waste tank should be considered.

3. Chemical feed equipment:

a. Shall be located near points of application to minimize length of feed lines;

b. Shall be readily accessible for servicing and repair, and observation of operation; and

c. Shall be located and protective curbings provided so that chemicals from equipment failure, spillage or accidental drainage shall not enter the water in conduits or treatment or storage basins.

4. Control:

a. Feeders may be manually or automatically controlled with the automatic control reverting to manual control as necessary;

b. The feeders shall be manually started following shutdown, unless otherwise approved by the division; and

c. Automatic chemical dose or residual analyzers may be approved for use and shall provide alarms for critical values, and recording charts.

5. Solution tanks. All solution tanks shall be manufactured of materials suitable as a food contact surface:

a. Means shall be provided to maintain uniform strength of solution, consistent with the nature of the chemical solution. Continuous agitation is necessary to maintain slurries in suspension;

b. Two solution tanks of specific capacity may be required for a chemical to assure continuity of chemical application during servicing;

c. Each tank exceeding 30 gallons in capacity or fixed in place shall be provided with a drain.

(1) No direct connection between any tank or drain and a sewer shall be permitted.

(2) All drains shall terminate at least two pipe diameters, but not less than two inches, above the rim of the receiving sump, conduit, or waste receptacle;

d. Means shall be provided to indicate the solution level in the tank;

e. Make-up water shall enter the tank above the rim at a distance of two pipe diameters but not less than two inches;

f. Chemical solutions shall be kept covered.

(1) Polyphosphate solutions shall be disinfected by carrying a chlorine residual when added to unchlorinated water.

(2) Large tanks with access openings shall have such openings curbed and fitted with tight covers;

g. Subsurface locations for solution tanks shall:

(1) Be free from sources of possible contamination;

(2) Assure positive drainage for groundwaters, accumulated water, chemical spills, and overflows; and

h. Overflow pipes, when provided, shall:

(1) Be turned downward, with end screened;

(2) Have free discharge;

(3) Be located where noticeable; and

(4) Be directed so as not to contaminate the water or be a hazard to operating personnel.

6. Weighing scales:

a. Shall be provided for weighing cylinders at all plants utilizing chlorine gas; for large plants, indicating and recording type are desirable;

b. Shall be required for fluoride solution feed in conjunction with a loss of weight recorder;

c. Should be required for volumetric dry chemical feeders; and

d. Shall be accurate to measure increments of 0.5% of load.

7. Feed lines:

a. Shall be as short as possible in length of run and be:

(1) Of durable, corrosion resistant material;

(2) Easily accessible throughout entire length;

(3) Protected against freezing; and

(4) Readily cleanable.

b. Shall slope upward from chemical source to feeder, when conveying gases;

c. Shall introduce corrosive chemicals in such manner as to minimize potential for corrosion;

d. Shall be designed consistent with scale forming solids depositing properties of the water, chemical solution, or mixture conveyed;

e. Shall not carry chlorine gas beyond the chlorine feeder room unless the chlorine is under vacuum; and

f. Shall be designed so that liquid alum does not mix with water prior to the point of application.

8. Service water supply:

a. Water used for dissolving dry chemicals, diluting liquid chemicals, or operating chemical feeders shall be:

(1) Only from a safe, approved source;

(2) Protected from contamination by appropriate means;

(3) Ample in supply and adequate in pressure;

(4) Provided with means for measurement when preparing specific solution concentrations by dilution; and

(5) Properly treated for hardness when necessary.

b. Where a booster pump is required, duplicate equipment shall be provided and, when necessary, standby power.

c. Backflow prevention shall be achieved by appropriate means such as:

(1) An air gap between fill pipe and overflow rim of solution or dissolving tank equivalent to two pipe diameters but not less than two inches;

(2) An approved reduced pressure zone backflow preventer, consistent with the degree of hazard, aggressiveness of chemical solution, back pressure sustained, and available means for maintaining and testing the device; or

(3) A satisfactory vacuum relief device.

D. Chemicals.

1. Quality.

a. Chemical containers shall be fully labeled to include:

(1) Chemical name, purity and concentration;

(2) Supplier name and address;

(3) Precautions in handling; and

(4) Requirements of Virginia Department of Labor and Industry, Virginia Occupational Safety and Health Standards for General Industry, section 1910.1200(f).

b. Chemicals shall meet American Water Works Association standards, where applicable, and be stamped or certified accordingly.

c. Provisions may be required for assay of the chemicals delivered where the quality is in doubt.

d. Chemicals having a distinguishing color may be used, providing the coloring material is not toxic in concentrations used and will not impart taste, odor, or color to the water supply.

2. Storage.

a. Space shall be provided where at least 30 days of chemical supply can be stored in dry storage conditions at a location that is convenient for efficient handling unless local suppliers and conditions indicate lesser storage is adequate.

b. Cylinders of chlorine gas shall be:

(1) Isolated from operating areas;

(2) Restrained in position to prevent upset; and

(3) Stored in rooms separate from ammonia storage.

c. Liquid chemical storage tanks shall:

(1) Have a liquid level indicator; and

(2) Have an overflow and a receiving basin or drain capable of receiving accidental spills or overflows.

d. Special precautions shall be taken with:

(1) Sodium chlorite, to eliminate any danger of explosion; and

(2) Activated carbon, which is a potentially combustible material, requiring isolated, fireproof storage and explosion proof electrical outlets, lights, and motors in areas of dry handling.

e. Chemicals shall be stored in covered or unopened shipping containers, unless the chemical is transferred into an approved covered storage unit.

f. Solution storage or day tanks supplying feeders directly should have sufficient capacity for one day of operation.

g. Acid storage tanks shall be vented to the outside atmosphere, but not through vents in common with day tanks.

3. Handling.

a. Provisions shall be made for measuring quantities of chemicals used to prepare feed solutions.

b. Storage tanks and pipelines for liquid chemicals shall be specific to the chemicals and not for alternates.

c. Chemicals that are incompatible shall not be fed, stored, or handled together.

d. Provisions shall be made for the proper transfer of dry chemicals from shipping containers to storage bins or hoppers in such a way as to minimize the quantity of dust which may enter the room in which the equipment is installed. Control shall be provided by use of:

(1) Vacuum pneumatic equipment or closed conveyor systems;

(2) Facilities for emptying shipping containers in special enclosures; or

(3) Exhaust fans and dust filters which put the hoppers or bins under negative pressure.

e. Precautions shall be taken with electrical equipment to prevent explosions, particularly in the use of sodium chlorite and activated carbon.

f. Acids shall:

(1) Be kept in closed, acid resistant shipping containers or storage units; and

(2) Not be handled in open vessels, but should be pumped in undiluted form from original containers, through suitable hose, to the point of treatment or to a covered day tank.

g. Carts, elevators, and other appropriate means shall be provided for lifting chemical containers to minimize excessive lifting by operators.

h. Provisions shall be made for disposing of empty containers by an approved procedure which will minimize exposure to the chemical.

E. Housing.

1. Structures, rooms, and areas accommodating chemical feed equipment shall provide convenient access for servicing, repair, and observation of operation.

2. Floor surfaces shall be smooth and impervious, slip-proof and well drained with a slope of 1/8 inch per foot, minimum.

3. Open basins, tanks, and conduits shall be protected from chemical spills or accidental drainage.

F. Operator safety.

1. Gases from feeders, storage, and equipment exhausts shall be conveyed to the outside atmosphere, above grade and remote from air intakes.

2. See 12 VAC 5-590-1000 for special provisions for handling and storing chlorine.

3. A plastic bottle of hydrochloric acid (muriatic acid in commercial form) shall be available for ammonia leak detection where ammonia gas is used or stored.

4. At least one pair of rubber gloves with long gauntlets, a dust respirator of a type approved by the Virginia Occupational Safety and Health Standards for General Industry, Section 1910.134 for toxic dusts, and an apron or other protective clothing shall be provided for each operator in any shift who will handle dry chemicals.

5. Rubber gloves, clothing protection, and goggles shall be provided for each operator preparing chemical solutions.

6. Facilities shall be provided for washing of the face, gloves, and protective equipment.

7. See 12 VAC 5-590-1000 E.

12 VAC 5-590-870. Mixing and sedimentation.

A. Plants designed for processing surface waters shall:

1. Provide multiple units for coagulation, flocculation, and sedimentation at plants having a rated capacity greater than 100 gallons per minute;

2. Permit operation of flocculation basins in series or parallel;

3. Be constructed to permit units to be taken out of service without disrupting operation; and

4. Provide multiple stage treatment facilities when required by the division.

B. Water containing high turbidity or coliform organisms may require pretreatment, usually sedimentation, either with or without the addition of chemicals. When pretreatment is used, the following requirements must be met:

1. Presedimentation basins utilizing a coagulant shall have hoppered bottoms or shall be equipped with continuous sludge removal apparatus;

2. Incoming water shall be dispersed across the full width of the line of travel as quickly as possible; short circuiting must be prevented;

3. Provisions for bypassing sedimentation basins shall be included; and

4. Three hours detention is the minimum period required. Greater detention may be required depending on raw water quality.

C. Flash mixing is the rapid dispersion of chemicals throughout the water to be treated, usually by violent agitation, to enhance coagulation.

1. Turbidity removal plants other than those of the solids contact type shall provide flash mixing facilities.

2. Basins shall be equipped with mechanical mixing devices; other arrangements, such as baffling, may be acceptable only under special conditions. Where mechanical mixing devices are utilized, duplicate units or spare mixing equipment shall be provided.

3. Design parameters:

a. The detention period shall not be less than 10 seconds;

b. The design of the flash mixing unit should be based upon the mean temporal velocity gradient G (expressed as units of seconds^{-1}). Typical values for G and T are:

T (seconds)	G (seconds^{-1})

20	1,000
30	900
40	700
Longer time	790

For optimization, the engineer should determine the appropriate G value and detention time through experimentation;

c. The point of application of the coagulant shall be at the point of maximum mixing intensity;

d. The physical configuration of the mixing basin shall be designed to eliminate vortexing; and

e. Flash mix units should be designed to allow speed variation throughout at a range of one to three.

4. Properly designed static mixers may be utilized.

D. Flocculation mixing is the agitation of treated water at low velocity gradients for sufficient time to agglomerate coagulated particles.

1. Basin inlet and outlet design shall prevent short circuiting and destruction of floc. A drain and overflow shall be provided. Multiple units shall be provided for continuous operability and each basin shall be designed so that individual basins may be isolated without disrupting plant operation.

2. Design parameters:

a. The minimum detention time shall be 30 minutes;

b. The design of the flocculation units shall be based upon the value of GT (mean temporal velocity gradient in seconds^{-1}) X (detention time in seconds) which is ordinarily in the range of 20,000 to 200,000. The engineer should establish the value of GT through experimentation;

c. Variable speed drive units shall be designed to provide speed variations throughout a range of four to one;

d. To control short circuiting in mechanical flocculators, at least three successive compartments should be provided. In addition, special attention should be given to the ports between compartments to further suppress short circuiting;

e. To accomplish maximum power input and reduce particle shearing, tapered flocculation should be provided;

f. In basins utilizing vertical shaft flocculators, wing walls, or stators shall be provided to prevent vortexing; and

g. The flocculation basins must be so designed that individual basins may be isolated without disrupting plant operation.

3. Flocculation and sedimentation basins shall be as close together as possible. The velocity gradient of the flocculated water through pipes or conduits to settling basins shall not be greater than the velocity gradient utilized in flocculating the water. Where velocity gradient is not used as a design parameter, the linear velocity in pipes and conduits from the flocculators to the settling basin shall not exceed 0.5 feet per second. Allowances must be made to minimize turbulence at bends and changes in direction.

4. Baffling may be used to provide for flocculation in small plants only after consultation with the division. The design should be such that the velocity gradients noted above may be maintained. Turbidity removal plants other than solids contact shall provide flocculation basins.

5. Safety. Guard rails and adequate lighting shall be provided.

E. Sedimentation shall follow flocculation/mixing. The detention time for effective clarification is dependent upon a number of factors relating to basin design and the nature of the raw water. The number of basins required is dependent upon the plant size, turbidity, color, colloidal matter, and taste and odor causing compounds to be removed.

1. Plants utilizing rapid rate gravity filters in conjunction with conventional sedimentation shall provide a minimum of four hours effective settling (detention) time. Effective settling time shall be calculated using the volume of the basins from the stilling wall to the submerged effluent orifice or weir.

2. Inlets shall be designed to distribute the water equally and at uniform velocities. Open ports, submerged ports, stilling walls, and similar entrance arrangements are required. Where stilling walls are not provided, a baffle shall be constructed across the basin close to the inlet and shall project several feet below the water surface to dissipate inlet velocities and provide uniform flows across the basin.

3. Outlet devices shall be designed to maintain velocities suitable for settling in the basin and to minimize short circuiting. The use of submerged orifices or submerged weirs is required. The maximum velocity gradient in pipes and conduits from the settling basins to the filters shall not exceed that used in flocculation. Where velocity gradient is not used as a parameter the linear velocity in pipes and conduits from settling basins shall not exceed 1.0 foot per second.

4. Rectangular sedimentation basins should be designed with a length to width ratio of at least four to one. Surface overflow rates should be within the range of 0.25 to 0.38 gallons per minute per square foot in processes utilizing flocculation, the lower limit being utilized for cold waters and the higher limit being applied to warm waters.

5. The circular clarifiers of the center feed, peripheral feed, and spiral flow type will be considered on an individual basis.

6. Basins shall be provided with a means for dewatering. Basin bottoms shall slope toward the drain not less than one foot in twelve feet unless mechanical sludge collection equipment is provided.

7. Superstructures are acceptable at specific plant locations where necessary. In areas where settling basins are subject to high and frequent cross winds, consideration should be given to the provision of windbreaks.

8. The velocity through settling basins shall not exceed 1.0 foot per minute. The basins shall be designed to minimize short circuiting. Baffles shall be provided as necessary to minimize short circuiting.

9. An overflow weir (or pipe) shall be installed which will establish the maximum water level desired on top of the filters. It shall discharge with a free fall at a location where the discharge will be noted.

10. Permanent ladders or handholds shall be provided for safety on the inside walls of basins above the water level. Guard rails shall be included. Flushing lines or hydrants shall not include interconnection of the potable water with nonpotable water.

11. For plants having a capacity of 100 gallons per minute or more, multiple basins are required and shall be so designed that individual basins may be isolated without disrupting plant operation.

12. Mechanical sludge collecting equipment shall be considered for all plants with a capacity of 100 gallons per minute or more.

13. Facilities are required by the State Water Control Board for disposal of sludge (see 12 VAC 5-590-990). Provision shall be made for the operator to observe or sample sludge being withdrawn from unit.

F. Units that combine softening and clarification are acceptable where water characteristics are not variable and flow rates are uniform. Before solids contact units are considered as clarifiers without softening, specific approval of the division shall be obtained. Clarifiers shall be designed for the maximum uniform rate and shall be adjustable to changes in flow which are less than the design rate and for changes in water characteristics. A minimum of two units is required.

1. A representative of the manufacturer shall supervise the installation and initial operation of each unit.

2. The following equipment shall be provided for plant operation.

a. Complete outfit of tools and accessories; and

b. Adequate piping with suitable sampling taps so located as to permit the collection of samples of water from critical portions of the units.

3. Chemical feed requirements are those listed in 12 VAC 5-590-860.

4. Mixing devices shall be constructed to:

a. Provide good mixing of the raw water with previously formed sludge particles; and

b. Prevent deposition of solids in the mixing zone.

5. Flocculation equipment:

a. Shall be adjustable;

b. Shall insure that coagulation occurs in a separate chamber or baffled zone within the unit; and

c. Shall provide a flocculation and mixing period of at least 30 minutes.

6. The sludge equipment shall provide either internal or external sludge concentrators in order to obtain a concentrated sludge with a minimum of waste water.

7. Sludge removal design shall provide that:

a. Sludge pipes shall be not less than three inches in diameter and so arranged as to facilitate cleaning;

b. Entrance to sludge withdrawal piping will prevent clogging;

c. Valves are located outside the tank for accessibility;

d. The operator may observe or sample sludge being withdrawn from the unit; and

e. A timeclock with proportional timer shall be provided for automatic blowoff.

8. Cross connections:

a. Blowoff outlets and drains shall terminate and discharge at a place satisfactory to the division; and

b. Cross connection control shall be included for the potable water mains used to backflush sludge lines.

9. The detention time shall be established on basis of the raw water characteristics and other local conditions that affect the operation of the unit. Based on design flow rates, the minimum detention time shall be:

a. Two hours for suspended solids contact clarifiers; and

b. One hour for the suspended solids contact softeners.

10. Softening units should be designed so that continuous slurry concentrates of 1.0% or more, by weight, can be satisfactorily maintained.

11. Water losses:

a. Solids contact units shall be provided with suitable controls for sludge withdrawal;

b. Total water losses should not exceed:

(1) Five percent for clarifiers; and

(2) Three percent for softening units; and

c. The solids concentration of sludges bled to waste should be:

(1) Three percent by weight for clarifiers,

(2) Five percent by weight for softeners.

12. Units used as clarifiers should be equipped with orifices. Units used for softening should be equipped with either overflow weirs or orifices. Weirs shall be:

a. Adjustable;

b. At least equivalent in length to the perimeter of the tank; and

c. Constructed so that surface water does not travel over 10 feet horizontally to the collection trough.

13. Weir loading:

a. Weir loading shall not exceed 20 gallons per minute per foot of weir length for units used as softeners; and

b. Orifices shall produce uniform rising rates over the entire area of the tank and shall provide for an exit velocity not to exceed 1.0 foot per second.

14. Upflow rates shall not:

a. Exceed 1.75 gpm/ft^2 of area at the slurry separation line for units used as softeners; or

b. Exceed 1.0 gpm/ft^2 of area at the sludge separation line for units used as clarifiers.

15. Consideration shall be given to providing a superstructure to enclose the solids contact unit, to enhance the treatment process, and for the protection of piping and associated sampling valves.

12 VAC 5-590-880. Filtration.

A. Rapid rate gravity filters acceptable for the treatment of water from surface water sources or groundwater sources under the direct influence of surface water.

1. Pretreatment is required where rapid rate gravity filters are utilized. Pretreatment shall include but not be limited to disinfection, coagulation, flocculation, and sedimentation.

2. At least two filtering units shall be provided at plants having a rated capacity of more than 100 gpm and less than 2 MGD. The total number of filters necessary at plants having a rated capacity equal to or greater than 2 MGD may be estimated utilizing the following formula:

$N = 2.7 (Q)^{0.5}$

(Formula as per Morrell and Wallace from Hardenbergh and Rodie's "WATER SUPPLY AND WASTE DISPOSAL 1960").

Where N equals number of filter units and Q equals plant capacity in million gallons per day.

3. The design rate of filtration shall be two gallons per minute per square foot of filter area.

4. The filter structure shall be so designed as to comply with the following requirements:

a. The walls within the filter shall be vertical;

b. The filter walls shall not protrude into the filter media;

c. The filter shall be covered by a superstructure if determined necessary under local climatic conditions;

d. There shall be head room to permit normal inspection and operation;

e. The filter shall have a minimum depth of 8 1/2 feet as measured from the normal operating water surface to the bottom of the underdrainage system;

f. A minimum water depth of three feet as measured from the normal operating water surface to the surface of the filter sand;

g. There shall be a water seal on the effluent line to prevent backflow of air to the filters;

h. A curb at least four inches high shall surround each filter to prevent floor drainage into the filter;

i. A hand rail shall enclose each filter or filter bank;

j. The maximum velocity gradient of treated water in pipes and conduits to the filters shall not exceed that used in flocculation. Where velocity gradient is not used as a parameter, the linear velocity in pipes and conduits from settling basins to filters shall not exceed 1.0 foot per second;

k. Influent pipes or conduits where solids loading is heavy, or following lime soda softening, shall be straight and equipped with cleanouts.

l. Washwater drain capacity shall be sufficient to carry the maximum flow;

m. Access in the form of walkways not less than 24 inches in width shall be provided to each filter; and

n. The normal operating water surface on a filter shall be at the same hydraulic grade level as the sedimentation basin.

5. Washwater troughs shall be so designed as to provide:

a. Bottom elevation of the trough above the maximum level of expanded media during washing;

b. A top elevation of the trough above the filter surface, not to exceed 30 inches;

c. A two inch freeboard at the maximum rate of wash;

d. A level top or edge;

e. Spacing so that each trough serves the same number of square feet of filter area; and

f. Maximum horizontal travel of suspended particles to reach trough not to exceed three feet.

6. Filter material.

a. Sand--A sieve analysis shall be provided by the design engineer. The media shall be clean silica sand having:

(1) A depth of not less than 27 inches and generally not more than 30 inches after cleaning and scraping; and

(2) An effective size of from 0.35mm to 0.5mm, depending upon the quality of the raw water and a uniformity coefficient not greater than 1.6.

b. Supporting media for the filter sand-A sieve analysis shall be provided by the design engineer. A three-inch layer of torpedo sand shall be used as a supporting media for the filter sand; such torpedo sand shall have:

(1) An effective size of 0.8mm to 2.0mm; and

(2) A uniformity coefficient not greater than 1.7.

c. Anthracite-A sieve analysis shall be provided by the design engineer. Clean crushed anthracite or a combination of sand and anthracite may be considered on the basis of data specific to the project; this media shall have:

(1) An effective size from 0.45mm to 0.8mm; and

(2) A uniformity coefficient not greater than 1.7.

d. Gravel, when used as the supporting media, shall consist of hard, rounded particles and shall not include flat or elongated particles. The coarsest gravel shall be 2 1/2 inches in size when the gravel rests directly on the strainer system, and must extend above the top of the perforated laterals or strainer nozzles. Not less than four layers of gravel shall be provided in accordance with the following size and depth distribution:

SIZE	DEPTH
2 1/2 to 1 1/2 inches	5 to 8 inches
1 1/2 to 3/4 inches	3 to 5 inches
3/4 to 1/2 inches	3 to 5 inches
1/2 to 3/16 inches	2 to 3 inches
3/16 to 3/32 inches	2 to 3 inches

Reduction of gravel depths may be considered upon application to the division where proprietary filter bottoms are proposed.

e. Granular activated carbon - See 12 VAC 5-590-960 B 6.

7. Porous plate bottoms shall not be used where iron or manganese may clog them or with waters softened by lime. The design of manifold type collection systems shall be such as to:

a. Minimize loss of head in the manifold and laterals;

b. Assure even distribution of washwater and an even rate of filtration over the entire area of the filter;

c. Provide a ratio of the area of the final openings of the strainer systems to the area of the filter of about 0.003;

d. Provide a total cross sectional area of the laterals at about twice the total area at the final openings; and

e. Provide a manifold which has a cross sectional area which is 1 1/2 to two times the total area of the laterals.

8. Surface wash facilities are required. Revolving type surface washers shall be provided; however, other types may be considered. All rotary surface wash devices shall be designed with:

a. Provisions for water pressures of 45 to 100 psi;

b. A vacuum breaker or other device to prevent backsiphonage;

c. Provisions for adequate surface wash water to provide 0.5 to one gallon per minute per square foot of filter area; and

d. Air washing may be considered.

9. The following shall be provided for every filter:

a. A sampling tap shall be placed between the filter and the effluent rate of flow controller and shall be equipped with an auxiliary spigot at the point of connection to the effluent line;

b. Indicating and recording loss of head gauges shall be required on all filters

having a capacity of greater than 100 gallons per minute. An indicating loss of head gauge shall be required on all filters having a capacity of 100 gallons per minute or less;

c. Indicating and recording rate of flow gauges shall be required on all filters having a capacity of greater than 100 gallons per minute. An indicating and totalizing water meter may be used in lieu of an indicating and recording gauge on filters having a capacity of 100 gallons per minute or less;

d. Effluent rate of flow controllers of the direct acting, indirect acting, constant rate, or declining rate types shall be required on each filter. All control devices used must incorporate an auxiliary shutoff valve in the filter effluent line. Indirect and direct acting effluent rate of flow control devices shall start operation from the closed position; Failure of indirect acting controllers shall not result in any increase in the rate of flow, at the time of failure;

e. Provisions for draining the filter to waste (rewash) with appropriate measure for backflow prevention are required;

f. Hose bibb, hose, and suitable rack for storage of hoses are required; and

g. Indicating and recording turbidimeters on filter effluent with automatic high turbidity alarm are required at all plants having a capacity of 10 MGD or more.

10. Provisions shall be made for washing filters (backwashing) as follows:

a. A minimum rate of 15 gallons per square foot per minute, consistent with water temperatures and specific gravity of the filter media; a rate of 20 gallons per square foot per minute or more is recommended to provide for adequate expansion of the filter media;

b. Filtered water shall be provided at the required rate by washwater tanks, a washwater pump, from the high service main, or a combination of these;

c. Washwater pumps shall be in duplicate unless an alternate means of obtaining washwater is available;

d. The volume of washwater shall provide for not less than 15 minutes wash of one filter at the design rate of wash;

e. A washwater controller or valve shall be provided on the main washwater line to obtain the desired rate of filter wash with the washwater valves on the individual filters open wide;

f. The rate of flow indicator on the main washwater line shall be located so that it can be easily read by the operator during the washing process; and

g. Where backwash pumps are provided, a means for air release must be provided between the backwash pump and the washwater valve.

11. Miscellaneous:

a. Roof drains shall not discharge into the filter or basins and conduits

preceding the filters;

b. Provisions must be made for continuous operation of all other filtering units while one filtering unit is out of operation; and

c. Automatic startup of filtering units is prohibited.

B. High rate gravity filters are acceptable for the treatment of water from surface water sources or groundwater sources under the direct influence of surface water. See 12 VAC 5-590-890 for design requirements.

C. Slow sand gravity filters are acceptable for the treatment of water from certain surface water sources or certain groundwater sources under the direct influence of surface water.

1. Source restrictions. Raw water quality for application to a slow sand filter without pretreatment shall meet the following requirements:

a. Not exceed a turbidity level of 5 NTU monthly average or 30 NTU peak day over a one year period;

b. Not exceed 800 total coliforms in 80% of a minimum of 50 samples taken over a minimum of a 52 week period;

c. Not exceed an apparent color level of 15 CU monthly average over a one year period; and

d. Groundwater sources under the direct influence of surface water shall pilot test to determine if the water contains sufficient nutrients for slow sand filtration to be a viable option.

2. Pretreatment. Raw waters that cannot meet the criteria listed in 12 VAC 5-590-880 C 1 a through c shall be treated to that quality prior to application to a slow sand gravity filter.

a. Presedimentation may be an appropriate pretreatment depending on the size and specific gravity of the turbidity particles.

b. Coarse media filtration of either a horizontal or vertical flow configuration may be appropriate for reducing levels of smaller size particles. Normally such roughing filters would be designed to accommodate periodic media removal, cleaning, and replacement.

c. Chemical flocculation and coagulation is normally not appropriate pretreatment for slow sand gravity filters.

d. Preoxidation is normally not appropriate pretreatment for slow sand gravity filters.

3. Number of filters. At least two filters shall be provided. In all cases the filters shall be capable of meeting the design maximum daily water demand with one filter out of service.

4. Filter media. Sand shall be clean silica sand that meets the following criteria:

a. The effective size shall be between 0.15 mm and 0.35 mm.

b. The uniformity coefficient shall not exceed 2.5.

c. The sand depth shall not exceed 55 inches. A minimum depth of 30 inches is required for normal operation.

5. Supporting media. Gravel shall meet the requirements of 12 VAC 5-590-880 A 6 d.

6. Structural details.

a. Sufficient head room shall be provided for normal movement on the filter by operating personnel for periodic sand removal operations.

b. Adequate manholes and access ports shall be provided for moving sand off and onto the filter.

c. There shall be no common wall between finished water and any lesser quality water.

d. Consideration should be given to providing facilities for dirty sand storage and washing, as well as for clean sand storage.

e. All slow sand filters should be covered.

7. Hydraulic design.

a. Filter to waste shall be provided for all slow sand filters.

b. Water entering the filter shall be distributed in a manner such that the surface of the filter shall not be disturbed in any way.

c. The nominal rate of filtration may range from 45 to 150 gpd/ft^2 (0.031 to 0.10gpm/ft^2) of sand area.

d. The minimum depth of water over the filters shall be three feet. The maximum depth of water over the filters shall not exceed five feet. An overflow capable of handling the maximum flow to the filter shall be provided at the maximum filter water level.

e. Underdrains shall be provided to assure an even rate of filtration across the filter surface. The maximum velocity of water in the lateral underdrains shall be 1.0 ft/sec. The underdrain spacing shall not exceed 12 feet.

f. Each filter shall be capable of being filled with water from the bottom up.

g. Each filter shall be equipped with a loss-of-head guage; a rate-of-flow control device such as an orifice, weir, or butterfly valve; a weir or effluent pipe designed to assure that the water level over the filter never drops below the sand surface; and filtered water sample taps.

8. Performance report. At the conclusion of at least 12 months but no more than 18 months operation of the full scale plant an engineering report shall be submitted to the division that summarizes operating conditions and establishes optimum filter curing time, optimum filter run times, raw and finished water bacteriological and turbidity data, and any other pertinent factors.

D. Diatomaceous earth filtration is essentially a straining process. The use of these filters is acceptable for application to surface waters or groundwaters under the direct influence of surface water with low turbidity and low bacterial contamination, and may be used for iron removal for groundwaters.

1. Source restrictions. Raw water quality for application to a diatomaceous earth filter without pretreatment shall meet the following requirements:

a. Bacteria shall not exceed 50 total coliforms in any sample.

b. Color shall not exceed 15 apparent CU units in any sample.

c. Turbidity shall not exceed 5 NTU in any sample.

2. Pretreatment. If the raw water can be treated to meet the above source restrictions diatomaceous earth filtration may be utilized.

3. Pilot plant study. Installation of a diatomaceous earth filtration system shall be preceded by a pilot plant study on the water to be treated.

a. Conditions of the the study, such as duration, filter rates, head loss accumulation, slurry feed rates, turbidity removal, bacteria removal, and other relative information shall be approved by the division prior to the study.

b. Satisfactory pilot plant results shall be obtained prior to submission of final construction plans and specifications.

c. The pilot plant study shall demonstrate the ability of the system to meet applicable drinking water standards at all times.

4. Types of filters. Pressure or vacuum diatomaceous earth filtration units will be considered for approval.

5. Treated water storage. Treated water storage capacity in excess of normal requirements shall be provided to:

a. Allow operation of the filters at a uniform rate during all conditions of system demand at or below the approved filtration rate, and

b. Guarantee continuity of service during adverse raw water conditions without bypassing the system.

6. Number of units. At least two filtering units shall be provided at plants having a rated capacity of more than 100 gpm.

7. Precoat.

a. Application. A uniform precoat shall be applied hydraulically to each

septum by introducing a slurry to the tank influent line and employing a filter-to-waste or recirculation system.

b. Quantity. Diatomaceous earth in the amount of 0.2 lb/ft^2 of filter area or an amount sufficient to apply a minimum of 1/5 inch coating shall be used with recirculation.

8. Body feed. A body feed system to apply additional amounts of diatomaceous earth slurry during the filter run is required.

a. Quantity. Rate of body feed is dependent on raw water quality and characteristics and must be determined in the pilot plant study.

b. Adequate accessibility to the feed system and slurry lines is required.

c. Continuous mixing of the body feed slurry is required.

d. Consideration should be given to providing a coagulant coating (alum or suitable polymer) of the body feed.

9. Filtration.

a. Rate of filtration. The recommended nominal rate is 1.0 gpm/ft^2 of filter area and shall not exceed 1.5 gpm/ft^2. The filtration rate shall be controlled.

b. Head loss. The head loss shall not exceed 30 psi for pressure diatomaceous earth filters, or a vacuum of 15 inches of mercury for a vacuum system.

c. Recirculation. A recirculation or holding pump shall be employed to maintain differential pressure across the filter when the unit is not in operation in order to prevent the filter cake from dropping off the filter elements. A minimum recirculation rate of 0.1 gpm/ft^2 filter area shall be provided.

d. Septum or filter element. The filter elements shall be structurally capable of withstanding maximum pressure and velocity variations during filtration and backwash cycles, and shall be spaced such that no less than one inch is provided between elements or between any element and a wall. Means shall be provided to check the septum(s) for cleanliness or damage. Consideration should be given to providing septum assemblies where individual septums can be removed, cleaned, repaired, and replaced.

e. Inlet design. The filter influent shall be designed to prevent scour of the diatomaceous each from the filter element.

10. Backwash. Provision shall be made for periodic backwashing of filter. A satisfactory method to thoroughly remove and dispose of spent filter cake shall be provided.

11. Appurtenances. The following shall be provided for every filter:

a. Sampling taps for raw and filtered water,

b. Loss of head or differential pressure gauge,

c. Rate-of-flow indicator, preferable with totalizer,

d. A throttling valve used to reduce rates below normal during adverse raw water conditions.

12. Monitoring. Turbidity monitoring is required for filter effluent. The monitoring may be done by recorder or daily periodic measurements.

E. Direct filtration.

1. General. Direct filtration refers to the filtration of high quality and seasonally consistent raw water without prior sedimentation. Design shall be preceded by a pilot study acceptable to the division. An in-plant demonstration study may be appropriate where a conventional treatment plant is to be converted to direct filtration.

2. Preliminary engineering report. A report shall be prepared and submitted to the division which included the following specific items, in addition to those listed in 12 VAC 5-590-200 C:

a. Historical summary of meteorological conditions.

b. Historical summary of raw water quality covering a period of at least one year with special reference to fluctuation in quality and possible sources of contamination. The following raw water parameters should be evaluated:

(1) Apparent color

(2) Turbidity

(3) Bacterial concentration

(4) Microscopic biological organisms

(5) Temperature

(6) Total solids

(7) General inorganic and organic chemical characteristics

(8) Additional parameters as required by the division.

c. Description of the pilot plant study methods and work to be done.

3. The pilot plant or in-plant demonstration study shall be conducted over a sufficient time to treat all expected raw water conditions throughout the year. The pilot plant filter shall be of a similar type and operated in the same manner as proposed for full-scale operation. The following items, as a minimum, shall be addressed:

a. Chemical mixing conditions including shear gradients and detention periods.

b. Chemical feed rates.

c. Use of various coagulant and filtration aids including polymers.

d. Flocculation conditions and contact time necessary for optimum filtration for each coagulant proposed.

e. Filtration rates.

f. Filter gradation, types of media, and depth of media.

g. Filter breakthrough conditions and backwash requirements.

4. Final engineering report. A final report including the engineer's design recommendation shall be prepared and submitted prior to the submission of plans and specifications.

5. Treatment facilities.

a. Flash mixing and flocculation. The design shall be based on the results of the pilot plant or in-plant demonstration study and the requirements in 12 VAC 5-590-870 C and D.

b. Filtration. Filters shall be dualmedia or multimedia gravity filters. The final design shall be based on the results of the pilot plant or in-plant demonstration study and the requirements in 12 VAC 5-590-890. Turbidity at the sand-coal interface of each filter shall be monitored by indicating and recording equipment.

6. Plant siting. The plant design should allow for the future installation of sedimentation basing.

F. Rapid rate pressure filters.

The use of these filters may be considered for iron and manganese and other clarification processes. Pressure filters shall not be used in the filtration of polluted water, water from surface water sources, groundwater under the direct influence of surface water, or following lime soda softening.

1. Minimum criteria relative to number, rate of filtration, structural details and hydraulics, filter media, etc. provided for rapid rate gravity filters also apply to pressure filters where appropriate.

2. The normal rate of filtration shall be 3 gpm/ft^2 of filter area.

3. The filters shall be designed to provide:

a. Loss of head gauges on the inlet and outlet pipes of each filter;

b. An easily readable meter or flow indicator on each battery of filters. A flow indicator is recommended for each filtering unit;

c. Filtration and backwashing of each filter individually with an arrangement of piping as simple as possible to accomplish these purposes;

d. Minimum sidewall shell height of five feet. A corresponding reduction in sidewall height is acceptable where proprietary bottoms permit reduction of the gravel depth;

e. The top of the washwater collection trough to be at least 18 inches above the surface of sand;

f. The underdrain system to collect efficiently the filtered water and to distribute the backwash water at a rate not less than 15 gpm/ft^2 of filter area;

g. Location of flow indicators and controls that is easily readable while operating the control valves;

h. Air release valve on the highest point of each filter;

i. Accessible manhole to facilitate inspections and repairs;

j. Means to observe the wastewater during backwashing; and

k. Construction to prevent cross connection.

12 VAC 5-590-890. High rate treatment processes.

A. General. High rate treatment processes are characterized by:

1. Precise coagulation control;

2. Turbidity monitoring throughout the process;

3. pH monitoring throughout the process;

4. Reduced flocculation time;

5. Reduced sedimentation time;

6. Use of multimedia filters incorporating anthracite and silica or other types of filter materials; and

7. Filter rates greater than two gallons per minute per square foot of filter area and not exceeding four gallons per minute per square foot of filter area.

B. Instrumentation.

1. The coagulation process shall be controlled by:

a. Zeta potential shall be measured by microelectrophoresis;

b. Dual pilot filters shall be required. The pilot filter shall consist of a small filter (about six inches in diameter) containing the same type and depth of media as the plant filters, and which is operated in the same manner as the larger plant units except that the plant raw water after the treatment chemicals have been added rather than the coagulated and settled water is applied to the pilot filter. The pilot filter shall be equipped with recording turbidimeters on the effluent to measure the filterability of the water as reflected by turbidity monitoring. Departures from these standards using proprietary pilot filters

may be considered;

c. Streaming current monitor--a continuous sampling instrument which measures the electric current generated when water flows past suspended particles contained in the water; and

d. In addition to one of the above devices, a multiple six-gang stirring machine for performing jar tests shall be provided.

2. Indicating and recording turbidity monitoring shall be provided for monitoring the turbidity of:

a. The raw water;

b. Settled water from each sedimentation basin;

c. Filter effluent from each filter; and

d. Finished water leaving the treatment plant.

3. Indicating and recording pH monitoring equipment shall be provided for monitoring:

a. The raw water;

b. The flash mix effluent; and

c. The finished water leaving the treatment plant.

C. Unit processes.

1. Flash mix facilities shall conform with 12 VAC 5-590-870 C.

2. Flocculation design shall comply with 12 VAC 5-590-870 D, except the minimum detention time shall be 20 minutes.

3. Sedimentation design shall comply with 12 VAC 5-590-870 E, except the minimum effective detention time shall be three hours.

4. Filtration.

a. The maximum rate of filtration shall not exceed four gallons per minute per square foot of filter area.

b. Number of filter units. At least two units shall be provided at plants having a rated capacity less than two million gallons per day. The total number of filters necessary at plants having a rated capacity equal to or greater than two million gallons per day may be estimated using the following formula:

$N = 1.35\ (Q)^{0.5}$

(Based upon the formula as per Morrell and Wallace from Hardenbergh and Rodie's "WATER SUPPLY AND WASTE DISPOSAL 1960" and modified for the high rate process).

Where N equals the number of filter units, Q equals the plant capacity in

million gallons per day.

c. Filters incorporated in the high rate treatment process shall be of the dual media or multimedia type. The media shall consist of anthracite, silica sand, or other suitable filter materials. Both dual media and mixed media filters will be considered. Since filters media designs utilized in the high rate treatment process are generally proprietary in nature, no attempt will be made to set standards for the minimum filter media depth, the effective size and uniformity coefficient of the filter media, or the specific gravity. However, beds having a minimum total depth of 27 inches of filter media with a minimum of 10 inches of fine sand will be considered. Other proposals for high rate processes shall be considered individually by the division.

d. Structural details and hydraulics - see 12 VAC 5-590-880 A 4.

e. Washwater trough - see 12 VAC 5- 590-880 A 5.

f. Filter bottoms and strainers - see 12 VAC 5-590-880 A 7.

g. Surface wash - see 12 VAC 5-590-880 A 8.

h. Appurtenances - see 12 VAC 5-590-880 A 9.

i. Backwash - see 12 VAC 5-590-880 A 10.

j. Miscellaneous - see 12 VAC 5-590-880 A 11.

5. Chemical application.

a. Suitable equipment for application of filter aids (polymers) to the influent of the filters shall be provided.

b. See 12 VAC 5-590-860.

12 VAC 5-590-900. Softening.

Softening shall not be used as the sole treatment method for surface waters or bacteriologically contaminated groundwater. The softening process selected shall be based upon the mineral qualities of the raw water and the desired finished water quality in conjunction with requirements for disposal of sludge or brine water, cost of plant, cost of chemicals, and plant location.

A. Lime, excess lime, and excess lime soda processes.

The applicable design standards for mixing, flocculation, and sedimentation are the same for the lime, excess lime, and excess lime soda processes as for conventional clarification except that the minimum flash mix time is five minutes, flocculation time is 40 minutes, and settling time is two hours. Where softening is included as a treatment process in conjunction with clarification, the greater detention time criteria shall govern. For criteria pertaining to softening with solids contact units, see 12 VAC 5-590-870 F.

1. Mechanical sludge removal equipment shall be provided in the sedimentation basin.

2. Determinations shall be made of the CO_2 content of the raw water. When concentrations exceed 10 milligrams per liter, the economics of removal by aeration as opposed to removal with lime should be considered.

3. Equipment for stabilization of water softened by the excess lime and excess lime soda processes is required.

4. Staging shall be considered when the excess lime soda process is employed.

5. Provision shall be included for proper disposal of softening sludges.

6. The use of excess lime shall not be considered an acceptable substitution for chlorination.

B. Cation exchange process.

Iron, manganese, or a combination of the two, in the oxidized state or unoxidized state, should not exceed 0.3 milligrams per liter in the water as applied to the ion exchange material. Pretreatment shall be required when the content of iron, manganese, or a combination of the two, is one milligram per liter or more.

1. The units may be of pressure or gravity type, or either an upflow or downflow design, using automatic or manual regeneration. Automatic regeneration is suggested for small plants.

2. The design capacity for hardness removal should not exceed 20,000 grains per cubic foot when resin is regenerated with 0.3 pounds of salt per kilograin of hardness removed.

3. The depth of the exchange material should not be less than three feet.

4. The rate of softening should not exceed seven gallons per square foot per minute and the backwash rate should be six to eight gallons per square foot per minute.

5. The freeboard shall depend upon the specific gravity of the media and the direction of the water flow.

6. The bottoms, strainer systems and support for the exchange material shall conform to criteria provided for rapid rate gravity filters.

7. Facilities shall be included for even distribution of brine over the entire surface of both upflow and downflow units. Backwash, rinse and air relief discharge pipes shall be installed in such a manner as to prevent any possibility of backsiphonage.

8. A bypass shall be provided around softening units to produce a blended water of desirable hardness. Meters shall be installed to measure total water delivered to the system and on each softener unit. An automatic proportioning or regulating device and shutoff valve should be provided on the bypass line. In some installations it may be necessary to treat the bypassed water to obtain acceptable levels of iron and manganese in the finished water.

9. Waters having five units or more turbidity shall not be applied directly to the cation exchange softener. Silica gel materials should be used for water having a pH above 8.4 and should not be used when iron is present. When the applied water contains a chlorine residual, the cation exchange material shall be a type that is not damaged by residual chlorine. Phenolic resin shall not be used.

10. Smooth nose sampling taps shall be provided for the collection of representative samples for both bacteriological and chemical analyses. The taps shall be located to provide for sampling of the softener influent, softener effluent, and the blended water. The sampling taps for the blended water shall be at least 20 feet downstream from the point of blending.

11. Brine measuring or salt dissolving tanks and wet salt storage facilities shall be covered. The makeup water inlet shall have a free fall discharge of two pipe diameters but not less than two inches above the maximum liquid level of the unit or be protected from backsiphonage. Water for filling the tank should be distributed over the entire surface by pipes above the maximum brine level in the tank. The salt shall be supported on graduated layers of gravel under which is a suitable means of collecting the brine. Wet salt storage basins must be equipped with manhole or hatchway openings having raised curbs and watertight covers having overhanging edges similar to those required for finished water reservoirs. Overflows, where provided, shall be turned down, have a proper free fall discharge and be protected with noncorrodible screens or self-closing flap valves.

12. Wet salt storage basins shall have sufficient capacity to store at least 30 days operating supply.

13. Stabilization for corrosion control shall be provided.

14. Suitable disposal must be provided for brine waste.

15. Pipes and contact materials shall be resistant to the aggressiveness of salt.

16. Salt storage tanks and feed equipment should be enclosed and separated from other operating areas in order to prevent damage to equipment.

12 VAC 5-590-910. Aeration. (Also see 12 VAC 5-590-970.)

Aeration treatment devices as described herein may be used for oxidation, separation of gases or for taste and odor control.

A. Natural draft aeration.

The design of natural draft aeration shall provide the following:

1. The water shall be distributed uniformly onto the top tray;

2. The water shall be discharged through a series of three or more trays with the separation of trays not less than six inches;

3. The trays shall be loaded at a rate ranging from one gallon per minute to five

gallons per minute for each square foot of total tray area;

4. The trays shall have slotted, woven wire cloth, or perforated bottoms;

5. The perforations shall be 3/16 to 1/2 inches in diameter and spaced one to three inches on centers when perforations are used;

6. Eight to 12 inches of inert media shall be used, such as coke or limestone which shall be two to six inches in size, and will not readily disintegrate due to freezing cycles;

7. The aerated water shall receive disinfection treatment; and

8. The trays shall be designed using materials resisting deterioration with consideration being given to corrosion, slime, and algae control.

B. Forced or induced draft aeration devices shall be designed to:

1. Provide an adequate liquid distribution and countercurrent of air through the enclosed aeration column;

2. Be insectproof and lightproof;

3. Be such that air introduced into column shall be screened through insect proof screen and be as free of dust as possible;

4. Ensure that water outlet is adequately sealed to prevent unwanted loss of air; and

5. Ensure that the sections of the aerator can be easily reached and removed for maintenance.

C. Pressure aeration may be used for oxidation purposes if a pilot plant study indicates the method is applicable; it is not acceptable for removal of dissolved gases. Filters following pressure aeration shall have adequate exhaust devices for release of air. Pressure aeration devices shall be designed to:

1. Give thorough mixing of compressed air with the water being treated; and

2. Provide screened and filtered air, free of obnoxious fumes, dust, dirt, and other contaminants.

D. Other methods of aeration may be used if applicable to the treatment needs. Such methods include, but are not restricted to, spraying, diffused air, and mechanical aeration. The treatment processes shall be designed to meet the particular needs of the water to be treated and are subject to the approval of the division.

E. Aerators that discharge through the atmosphere should be protected from wind by being placed in a louvered enclosure designed to provide easy access to the interior.

F. Aerators that are used for oxidation or removal of dissolved gases from waters that will be given no further treatment other than chlorination shall be protected from contamination from insects and birds.

G. Ventilation shall be provided to prevent the accumulation of released gases in the building housing the treatment facilities.

H. A bypass should be provided for all aeration units.

12 VAC 5-590-920. Iron and manganese control.

Iron and manganese control, as used herein, refers solely to treatment processes designed specifically for this purpose. The treatment process used will depend upon the character of the raw water. The selection of one or more treatment processes shall meet specific local conditions as determined by engineering investigations, including chemical analyses of representative samples of water to be treated, and receive the approval of the division.

It may be necessary to operate a pilot plant in order to gather all information pertinent to the design.

A. Removal by oxidation, detention, and filtration.

1. Oxidation may be by aeration or by chemical oxidation with chlorine or potassium permanganate.

2. A minimum detention of 30 minutes shall be provided following oxidation by aeration in order to insure that the oxidation reactions are as complete as possible. This minimum detention time shall be reduced only when a pilot plant using the water under study demonstrates a lesser detention time. The detention basin shall be designed as a holding tank with no provision for sludge collection but with sufficient baffling to prevent short circuiting. Sedimentation basins shall be provided when treating water with high iron or manganese content or where chemical coagulation is used to reduce the load on the filters. The detention time shall be in a range of one to four hours where sedimentation is necessary prior to filtration. Pilot studies should be made of the water to determine the necessary detention time.

3. Filtration - see 12 VAC 5-590-880.

B. Removal by lime-soda process - see 12 VAC 5-590-900 A.

C. Removal by units using continuous potassium permanganate regeneration.

This process consists of a continuous feed of potassium permanganate to the influent of a manganese greensand filter. Positive displacement type feeders shall be provided, and the feed rate shall be adequately controlled by using feeders which are paced by water meters or ratio type feeders (which are a combination type feeder and flow meter) to prevent an overdosage of potassium permanganate.

1. The permanganate shall be applied following pH affecting chemicals.

2. Other oxidizing agents or processes such as chlorination or aeration may be used prior to the permanganate feed to reduce the cost of the chemical.

3. The normal filtration rate is three gallons per minute per square foot. Lower

filtration rates may be required or higher filtration rates may be permitted if justified by field studies and approved by the division.

4. The normal wash rate is eight to 12 gallons per minute per square foot.

5. Air washing may be provided.

6. Sample taps shall be provided.

a. Prior to application of permanganate;

b. Immediately ahead of filtration;

c. At a point between the anthracite coal media and the manganese treated greensand;

d. Halfway down the manganese treated greensand; and

e. For filter effluent.

D. Removal by ion exchange. This process of iron and manganese removal may not be acceptable for waters containing high concentrations (more than 1.0 milligrams per liter) of iron, manganese, or combination thereof. Applications may be limited based on the media used. This process may not be acceptable where either the raw water or wash water contains dissolved oxygen. (See 12 VAC 5-590-900 B for general cation exchange information.)

E. Sequestering - see 12 VAC 5-590-950 E.

F. Sampling taps shall be provided for control purposes. Taps shall be located on each raw water source, each treatment unit influent and each treatment unit effluent.

G. Testing equipment shall be provided for all plants. The equipment shall have the capacity to accurately measure the iron content to a minimum of 0.1 milligrams per liter and to indicate manganese removal.

12 VAC 5-590-930. Fluoridation.

Where practicable and feasible, the board may require owners of waterworks to provide artificial fluoridation so as to bring the fluoride ion concentration to the optimum level as set forth in Article 1 of Part II.

A. Prior to the issuance of a permit for fluoridation, plans, specifications, operating procedures, and methods of supervision shall be submitted to the division. These shall be in conformity with requirements to be determined for each individual installation by the division.

B. Fluoride compounds. Commercial sodium fluoride, sodium silicofluoride and hydrofluorosilicic acid shall conform to the applicable AWWA standards. Use of other chemicals which may be made available must be approved by the division.

C. Fluoride compound storage. Compounds shall be stored in covered or unopened shipping containers in a separate room with the chemical feeder. The room must be provided with mechanical ventilation to the outside of the building.

D. Chemical feed installations.

1. Chemical feed installations shall conform to 12 VAC 5-590-860.

2. Scales and loss of weight recorders for dry chemical feeders and hydrofluorosilicic acid feeders shall be provided.

3. Feeders shall have an accuracy so that the actual feed rate will be within 5.0% of the intended feed rate.

4. The point of application of hydrofluorosilicic acid, if into a pipe, shall be so located as to provide adequate mixing.

5. All fluoride feed lines shall be provided with adequate antisiphon devices.

6. The water applied to sodium fluoride saturator feeders shall be softened if hardness exceeds 75 milligrams per liter.

7. Unless otherwise approved, fluoride shall be applied to the raw water with the feeder paced by the raw water meter.

8. Provisions shall be made for venting hydrofluorosilicic acid carboys to the outside of the building when the carboys are in use.

E. Suitable protective equipment shall be provided which includes gloves, aprons, dust mask, and goggles.

F. Suitable equipment shall be provided for wetmopping and hosing dust that might accumulate in the plant. Dry feeders shall be equipped with bag loading hoppers.

G. Equipment shall be provided for measuring the quantity of fluoride ion in the water. Testing equipment shall be colorimetric or electrode type as approved by the division.

12 VAC 5-590-940. Fluoride removal.

Fluoride removal may be accomplished by blending with a different quality water or by removal treatment.

A. Blending. Blended water must result in all water delivered to the distribution system being of the same quality.

B. Treatment.

1. Chemical feed shall conform to 12 VAC 5-590-860.

2. Treatment includes use of ion exchange, activated alumina, bone char, reverse osmosis or electrodialysis. Other processes may be utilized if they adequately defluoridate. The selected design is to be supported by pilot studies unless at least two pilot studies, or two prototype plants, have demonstrated that the selected design is feasible. Such studies or prototypes should be for waters having characteristics similar to the water that is to be treated.

3. Raw water pH shall be adjustable to an optimum level to achieve the best

fluoride removal.

4. With any one unit out of service, the remaining unit or units must be capable of handling peak day flows.

5. Filter clogging constituents such as iron having a concentration greater than 1.0 milligrams per liter should be removed prior to defluoridation. If applicable, chlorination is to be applied after defluoridation.

6. Test equipment must be provided and must be accurate to at least 0.1 milligrams per liter.

7. An operation and maintenance (O & M) manual must be provided.

12 VAC 5-590-950. Stabilization.

Water that is unstable due either to natural causes or to the treatment given to the water should be stabilized. Water treated with excess lime for softening or manganese removal shall be treated by carbon dioxide or acid.

A. Carbon dioxide addition.

1. The recarbonation chamber design should provide:

a. A detention time of three to 10 minutes;

b. A depth of about eight feet; and

c. A reaction tank with a detention time of 20 minutes.

2. Adequate precautions shall be taken to prevent the possibility of carbon monoxide entering the plant from the recarbonation and reaction chamber.

B. Sulfuric acid.

1. Feed equipment for sulfuric acid shall conform to 12 VAC 5-590-860.

2. Adequate precautions shall be taken for safety.

C. Removal of free carbon dioxide. Carbon dioxide may be removed by an alkali, following aeration. The addition of an alkali following aeration may not be necessary when the alkalinity of the aerated water is greater than 80 milligrams per liter.

D. Deposition of calcium carbonate film. The desired calcium carbonate film may be obtained by using either soda ash or caustic soda when the alkalinity of the water exceeds about 35 milligrams per liter. Soft waters should be treated with lime to provide the required calcium. Soft waters which also have a low carbon dioxide content may need a mixture of lime and soda ash to provide both calcium and carbonate for the calcium carbonate film.

E. Polyphosphates. Polyphosphates are applicable for sequestering dissolved minerals.

1. Feed equipment shall conform to 12 VAC 5-590-860.

2. Phosphate chemicals shall be food grade.

3. Stock phosphate solution shall be kept covered and disinfected by carrying approximately 10 milligrams per liter chlorine residual.

4. Satisfactory chlorine residuals should be maintained in the distribution system when phosphates are used.

F. Under some conditions, softening plants can be designed using split treatment in which raw water is blended with softened water to partially stabilize the water. Treatment plants designed to utilize split treatment should, in most cases, also contain facilities for further stabilization by other means.

G. Water unstable due to biochemical action in the distribution system. Residual chlorine throughout the distribution systems may be used to prevent corrosion due to decomposition of organic matter (especially in dead-ended mains), the biochemical action within tubercles and the reduction of sulfates to sulfides.

H. Cathodic protection may be used to prevent or minimize corrosion of the inner surfaces of water tanks and standpipes and the outer surfaces of metal conduits.

I. Laboratory equipment shall be provided for determining the effectiveness of stabilization treatment and concentration of chemicals in the treated water.

12 VAC 5-590-960. Taste and odor control.

Tastes and odors found in water are primarily organic in nature. Since the presence of taste and odor problems in a water supply suggests to the consumer that the water may contain potentially toxic agents, expenditures are justified to improve the aesthetic quality of the water and maintain the consumers' confidence in the water utility.

A. Source treatment. Taste and odor problems in raw water sources are most frequently caused by the presence of plankton, or more specifically, algae. The treatment methods and dosages listed below have been found effective in some applications.

1. The continuous or periodic treatment of raw water with copper sulfate and other copper compounds to kill algae or other growths shall be controlled to prevent a copper concentration in excess of 1.0 milligrams per liter, as copper, in the plant finished water.

2. The periodic treatment of the shallow areas of a reservoir with an activated carbon dosage of 0.2 to 0.5 pounds per 1,000 square feet of water surface has been found effective in some applications.

3. A potassium permanganate dosage from 0.4 to 4.0 milligrams per liter has been found effective in some applications.

4. Chlorine dosages that produce 0.2 to 1.0 milligrams per liter of free chlorine in the treated water have been found effective in some applications. Prior to treatment, this treatment method should be evaluated to determine that it will not

cause any objectionable tastes or odors in the treated water.

B. Treatment methods. The waterworks shall be designed to produce high quality water regardless of any changes or emergencies that may arise with the raw water source. Provisions to handle taste and odor problems should be included in all designs regardless of the anticipated raw water quality.

1. Provisions shall be included in the design of the treatment plant to add chlorine or other approved oxidizing chemicals at the reservoir or at the head of the treatment plant. If breakpoint chlorination is proposed to treat taste and odor problems, extreme caution is warranted to insure that the actual breakpoint of the water is determined accurately. Dechlorination may be required if deemed necessary.

2. Chlorine dioxide can be utilized to treat any taste and odor problems susceptible to oxidation.

3. Potassium permanganate has oxidizing capabilities that can be utilized to treat taste and odor problems. It is normally fed to the raw water during the flash mix operation in a dosage such that the pink color formed during its solution travels only 1/2 to 2/3 of the length of the sedimentation basins.

4. Aeration has been used successfully to treat tastes and odors attributed to volatile organic matter but has shown limited success in treating tastes and odors associated with dissolved and suspended organic matter. Aeration facilities shall be designed in accordance with the provisions of 12 VAC 5-590-910.

5. When taste and odor problems are anticipated on an intermittent basis, treatment facilities shall be included in the water treatment plant design for the addition of powdered activated carbon. The dosage of powdered activated carbon required to treat taste and odor problems will vary with each individual raw water, and extensive lab work should be undertaken to ascertain that the carbon feed equipment is properly sized. The carbon feed equipment shall be capable of adding at least 40 milligrams per liter of powdered activated carbon regardless of the anticipated raw water quality. In the water treatment plant design, facilities should be provided to add powdered activated carbon to the flash mixer, to the flocculation basins, at the midpoint of sedimentation basins, and to the conduits leading to the filters.

The carbon can be added as a premixed slurry, or by means of a dry feed machine as long as it is assured that the carbon is properly wetted. All mechanisms for handling dry carbon should be tightly sealed and dust collection is required on all installations. The feed machine hopper wall should be on at least a 60 degree angle to the horizontal.

The carbon feed lines to the application points should be sized to handle the carbon suspension and should be equipped with flushing provisions.

6. Granular activated carbon units may be used in place of filters described in

12 VAC 5-590-880 with appropriate pretreatment described in 12 VAC 5-590-870. Rates of flow shall be consistent with the type and intensity of the problem. The design of the facilities must be supported by the results of pilot plant studies.

12 VAC 5-590-970. Removal of volatile synthetic organic chemicals (VOCs).

Appropriate processes or technologies (either specified as BAT in Appendix N or a division-approved alternative, such as other aeration techniques) that treat all the water in the waterworks shall be applied to achieve compliance. The selected design is to be supported by pilot studies unless at least two pilot studies, or two prototype plants, have demonstrated that the selected design is feasible. Such studies or prototypes shall be for waters having characteristics similar to the water that is to be treated.

A. Granular Activated Carbon (GAC). As in taste and odor control, GAC units may be used with appropriate pretreatment described in 12 VAC 5-590-870 B. The elements of a GAC system include carbon contactors, a carbon storage and transfer system, a regeneration system and a control system.

The selected GAC shall meet AWWA Standards. Multiple units shall be provided to process at least the peak day flow rate with one unit out of service. As carbon is corrosive, the use of noncorrosive piping and storage materials is mandatory.

B. Packed tower aeration. (Also see 12 VAC 5-590-910.)

1. Usually more efficient than other types of waterfall (natural) aeration.

2. With one unit out of service, the remaining unit(s) must be capable of handling peak day flows.

12 VAC 5-590-980. Microscreening.

A microscreen is a mechanical supplement to treatment capable of removing suspended matter from water by straining. It shall not be used as a substitute for clarification or filtration.

A. The design of microscreening facilities shall give due consideration to:

1. A sanitary survey and chemical and biological evaluation;

2. The nature of suspended matter to be removed;

3. The corrosiveness of water;

4. The effect of chlorination when required as pretreatment; and

5. Control of the hydraulic capacity of the microscreen.

B. The design shall provide:

1. For durable, corrosion resistant screens;

2. A bypass and cleaning arrangement;

3. Duplicate units for continuous operation;

4. Protection against back siphonage when potable water is used for washing; and

5. Proper disposal of wash water.

12 VAC 5-590-990. Waterworks waste.

A. With the exception of sanitary sewage and flows recycled through the water treatment system, the wastes generated during the operation of water filtration plants constitute industrial wastes and are subject to the State Water Control Law (Chapter 3.1 (§ 62.1-44.2 et seq.) of Title 62.1 of the Code of Virginia).

Industrial wastes generated by water treatment facilities include, but are not limited to, the following:

1. Filter backwash water;

2. Coagulant sludges;

3. Softening sludges;

4. Microscreening sludges;

5. Iron and manganese sludges;

6. Sludges from presedimentation units; and

7. Brine wastes.

B. After receipt of plans and specifications from the consulting engineer for the water treatment facilities, the division will advise the State Water Control Board of any proposal to treat and discharge industrial wastes into state waters. The division will submit to the State Water Control Board a letter report to include the following:

1. Capacity of the proposed treatment facilities;

2. Location of the proposed facilities;

3. Proposed final disposition of the treated waste effluent;

4. Name and address of the consulting engineer; and

5. Name and address of the owner.

C. Except for recycle flows as described in 12 VAC 5-590-420 K, the State Water Control Board will then deal directly with the consulting engineer in reference to the final disposal of these wastes and.

D. The sanitary wastes from water treatment plants must receive treatment. Wastes from these facilities must be discharged either directly to a sanitary sewer system or to an approved individual waste disposal facility providing suitable treatment.

12 VAC 5-590-1000. Disinfection.

A. Objective. To prevent the occurrence of waterborne diseases from consumption of drinking water.

B. Methods. Disinfection shall be accomplished by the application of chlorine. The specific chlorine compound shall be selected on the basis of water flow rates, application rates, pH of the water, cost of equipment and chemicals, availability of disinfectant, and reliability of feed equipment. Alternate chemicals and methods for disinfection are to be handled as unconventional and the procedures of 12 VAC 5-590-300 apply.

C. Equipment.

1. Solution feed vacuum type gas chlorinators are generally preferred. The use of hypochlorite feeders of the positive displacement type may be considered for small installations.

2. Chlorinator capacities will vary, depending on the use and point of application of the chlorine and the raw water quality. Chlorination capacity shall be such that a minimum dosage of 15 milligrams per liter may be fed at all times.

3. Standby chlorination equipment shall be provided and chlorination capacities shall comply with 12 VAC 5-590-1000 C 2 with any unit out of operation for repairs. Spare parts shall be available for all chlorinators to replace parts which are subject to wear and breakage. All chlorinators shall be properly maintained and operated.

4. An ample supply of potable water shall be available for operating the chlorinator. Where a booster pump is required, duplicate equipment shall be provided, and, when necessary, standby power as well. Equipment for backflow prevention shall be provided. A pressure gauge shall be provided on each chlorinator water supply line.

5. Scales for weighing cylinders shall be provided at all waterworks using chlorine gas. At large waterworks, scales of the indicating and recording type are recommended. Scales shall be recessed unless they are of the low platform type.

6. Where manifolding of several cylinders is required to evaporate sufficient chlorine, consideration shall be given to the installation of gas evaporators.

7. A bottle of ammonia hydroxide solution shall be available for detecting chlorine gas leaks. Consideration shall also be given to the provision of caustic soda solution reaction tanks for absorbing the contents of leaking one-ton cylinders where such cylinders are in use. At large installations, consideration should be given to the installation of automatic gas detection and related alarm equipment. Emergency cylinder repair kits shall be provided.

8. Piping and connections for chlorine gas.

a. Piping arrangements should be as simple as possible. Pressure gauges shall be installed on the piping to each chlorinator. The number of screwed or flanged joints should be held to a minimum. Piping systems should be well supported and adequately sloped to allow drainage; low spots should be avoided. Suitable allowance should be provided for pipe expansion due to

changes in temperature. Liquid chlorine has a high coefficient of thermal expansion. If liquid chlorine (containing no gas bubbles) is trapped between two valves, high pressure will develop upon increase in the temperature of the chlorine. This pressure may lead to hydrostatic rupture of the line. The effects of possible rupture should be considered in the design of any piping system. Where such rupture would present an undue hazard to personnel or equipment by allowing large quantities of chlorine to escape, protection of the system against hydrostatic pressure should be provided.

b. Condensation or reliquefaction of chlorine may occur in chlorine gas lines which pass through areas where the temperature is below the temperature pressure equilibrium indicated in the vapor pressure curve. Where adequate superheat is not provided by a vaporizer, condensation can be prevented by reducing the pressure with a pressure reducing valve.

c. It is recommended that joints in chlorine piping be flanged or welded. If threaded joints are used, extreme care should be taken to obtain clean, sharp threads. A lubricating pipe dope suitable for chlorine should be used. All threading oil must be thoroughly cleaned from the pipe. For permanent joints, linseed oil and graphite, glycerine or Teflon tape may be used. If Teflon tape is used, all remnants must be removed before joints are remade.

d. Fittings and appurtenances must be suitable for handling dry chlorine.

9. Chlorine solution is very corrosive to all of the common construction metals. At low pressures, chlorine solution can be handled in chemical stoneware, glass or porcelain equipment, and by certain alloys. Hard rubber, unplasticized polyvinylchloride, glassfiber reinforced polyester, polyvinylidene chloride, and fully halogenated fluorocarbon resins have been used successfully. Low molecular weight polyethylene, fiber reinforced rubber hose, and wrapped rubber hose have been used successfully for small capacity chlorinators. All of these materials must be selected with great care. For higher pressures, combinations using resistant lining materials (rubber, kynar, saran, Teflon, etc.) with the common metals for strength should be used.

Titanium may be used with chlorine solution, but must not be used with chlorine gas. Tantalum is inert to chlorine solution at temperatures up to 300°F. Hastelloy Alloy C TM and Monel Alloy TM are widely used. Platinum and silver find special applications. In general, operations involving chlorine solution require individual study.

Chlorine and equipment suppliers shall make recommendations only after careful survey of all factors involved.

10. Chlorine solution and hypochlorite solution piping shall be arranged such that prechlorination or postchlorination may be accomplished by any or all chlorinators.

D. Engineering design.

1. Any building to house chlorine equipment or containers should be designed and constructed to protect all elements of the chlorine system from fire hazards. If flammable materials are stored or processed in the same building, a fire wall should be erected to separate the two areas. Fire resistive construction is recommended.

If gas chlorination equipment and chlorine cylinders are to be in a building used for other purposes, a gas tight partition shall separate this room from any other portion of the building. Doors to this room shall open only to the outside of the building, and shall be equipped with panic hardware. Such rooms shall be at ground level, and should be separated from the feed area.

At least two means of exit should be considered from each separate room or building in which chlorine is stored, handled, or used. All exit doors shall open outward.

A clear glass, gas tight window shall be installed in an interior wall of the chlorinator room to permit the chlorinators to be viewed without entering the room.

Feed lines shall not carry chlorine gas beyond the chlorine feeder room unless the chlorine is under vacuum.

2. Chlorinator rooms shall be provided with a means of heating so that a temperature of at least 60°F can be maintained, but the room should be protected from excess heat. Cylinders shall be kept at essentially room temperature for at least 24 hours prior to use unless an evaporator is employed.

3. Forced, mechanical ventilation which will provide one complete air change per minute shall be installed in all chlorine feed rooms and rooms where chlorine cylinders are stored. The entrance to the air exhaust duct from the room shall be near the floor and the point of discharge shall be located so as not to contaminate the air inlet to any building or inhabited areas. Air inlets shall be located so as to provide cross ventilation with air and at such temperature that will not adversely affect the chlorination equipment. The vent hose shall run without traps from the chlorinator and shall discharge to the outside atmosphere above grade.

4. The electrical controls for the fans and lights shall be such that they will automatically operate when the door is opened and can be manually operated from the outside without opening the door.

E. Respiratory protection. The use of self-contained breathing apparatus (SCBA) in compliance with OSHA Respiratory Protection Standard 1910.134, "VIRGINIA OSHA STANDARDS" for General Industry, is required whenever anyone is dealing with an accidental release of chlorine. All waterworks that use chlorine gas at their treatment facility shall maintain a respiratory protection plan including emergency procedures, evacuation plans, designated SCBA personnel and any special site specific requirements. All respiratory protection devices shall be stored to protect against dust,

sunlight, heat, extreme cold, excessive moisture or damaging chemicals; and in a location remote from the chlorine area.

F. Application of chlorine.

1. Provisions shall be made to ensure uniform mixing of the chlorine solution or hypochlorite solution with the water near the point of application.

2. Residual and contact time.

a. Waterworks with surface water sources shall provide a minimum residual (C) and contact time (T) as calculated in accordance with Appendix L. Appendix L contains information on CT calculations and methods, as well as information on contact tank baffling arrangements.

b. Waterworks with groundwater sources shall provide a minimum 30 minute hydraulic detention period (based on design flow) for chlorine contact.

G. Evaluation of effectiveness.

1. Sampling - see 12 VAC 5-590-770.

2. Equipment shall be provided for measuring chlorine residual employing any method listed in the most recent edition of "Standard Methods for the Examination of Water and Wastewater."

The equipment should enable residual chlorine measurement to the nearest 0.1 milligram per liter in the range below 0.5 milligram per liter, and to an accuracy of approximately 25% above 0.5 milligram per liter. The installation of continuous automatic chlorine residual analyzers recording and proportioning systems may be required on large installations.

Article 4. Pumping Facilities.

12 VAC 5-590-1010. General.

Pumping facilities shall be designed to maintain the sanitary quality of pumped water. Subsurface pits or pump rooms and inaccessible installations should be avoided.

12 VAC 5-590-1020. Location.

The pumping station shall be located so that the proposed site will meet the requirements of the sanitary protection of the water quality and the hydraulics of the system and be protected against interruption of service by fire, flood, or any other hazard. The station shall be:

1. Elevated to a minimum of one foot above the 100-year flood elevation or protected to such elevation;

2. Accessible at all times unless permitted to be out of service for a period of inaccessibility;

3. Graded around the station so as to lead surface drainage away from the station; and

4. Protected to prevent vandalism and entrance by animals or unauthorized persons,

5. Located with respect to availability of a power or a fuel supply.

12 VAC 5-590-1030. Groundwater facilities.

Where pumping facilities are used, wells and springs shall be vented by properly hooded and screened pipe extending at least 12 inches above the pump floor or ground surface. Where necessary, provisions shall be made for lubricating the pump from a point at least six inches above the top of the well cover by means which will prevent contamination of the water supply.

A. General well appurtenances.

The following well appurtenances are required:

1. A sanitary seal shall be provided on the top of the well casing;

2. A properly screened vent with the end elbowed downward shall be provided for the well casing;

3. A sampling tap shall be provided for raw water sampling which discharges in a downward direction and away from the well casing;

4. Adequate control switches, etc., for the pumping equipment shall be provided;

5. A water meter is required to determine water production for each well and the meter shall be located upstream of the well blow-off;

6. The well casing shall extend at least 12 inches above the concrete floor or apron surrounding the well;

7. Adequate support for the well pump and drop pipe shall be provided; and

8. Each well casing shall be equipped with a drawdown gauge, airline, and appurtenances for measuring the change in the elevation of the water level in the well.

B. Drilled wells with the prime mover mounted on the casing shall:

1. Have the casing extend 12 inches above the floor, and be equipped with a flange or suitable sanitary seal;

2. Have the casing firmly connected to the pump structure or have the casing inserted into a recess extending at least one inch into the base of the pump if a watertight connection is not provided;

3. Have the base of the pump not less than 12 inches above the pump room floor or apron; and

4. Have the pump foundation and base designed to prevent water from coming into contact with the joint between the casing and the prime mover.

C. Submersible pumps. Where a submersible pump is used, the top of the casing shall be effectively sealed against entrance of water under all conditions of vibration or movement of conductors or cables and shall have a gooseneck vent with a screen covered opening.

D. Discharge piping. The discharge piping shall be provided with separate means to pump (blowoff) water of unsatisfactory quality to a point away from the groundwater source but shall not be directly connected to a sewer. The discharge line shall:

1. Have control valves located above the pump floor;

2. Be protected against freezing;

3. Be valved to permit testing and control of each well;

4. Have watertight joints;

5. Have all exposed valves protected; and

6. Have erosion protection at the point of waste discharge.

E. General well pump house construction requirements.

1. The well pump house floor or apron surrounding the well shall:

a. Be of good quality concrete with adequate reinforcement;

b. Be a minimum of six inches in thickness;

c. Extend a minimum of three feet in all directions from the well; and

d. Slope at least 1/4 inch per foot towards a screened four inch floor drain to

atmosphere.

2. Well houses or well pump stations in pits are prohibited.

3. Well pump stations housing chlorination equipment shall meet the requirements of 12 VAC 5-590-1000.

12 VAC 5-590-1040. Pump stations.

A. Pump stations associated with surface water sources, treatment facilities, and finished water shall:

1. Have adequate space for the installation of additional units if needed and for the safe servicing of all equipment;

2. Be of durable construction, fire and weather resistant, and furnished with outward opening doors;

3. Have the floor elevation at least six inches above the finished grade, if possible;

4. Have the underground structure waterproofed;

5. Have all floors drained without impairing the quality of water being handled, and, if equipment is contained on the floor, the floor shall slope at least 1/8 inch in every foot to the point of discharge; and

6. Provide suitable outlet for drainage from pump glands without discharging onto the floor.

B. Suction wells. Suction wells shall:

1. Be watertight;

2. Have floors sloped to permit removal of water and entrained solids; and

3. Be covered or otherwise protected against contamination, including contamination by pump lubricants.

C. Equipment servicing in pump stations.

1. Craneways, hoist beams, eyebolts, or other adequate facilities for servicing or removal of pumps, motors, or other heavy equipment shall be provided.

2. Walkways shall be provided to lubrication points of equipment if these are located at intermediate points between floors.

3. Openings in floors, roofs, or wherever else needed for removal of heavy or bulky equipment shall be provided.

4. A convenient tool board or other facilities shall be provided as needed for proper maintenance of the equipment.

D. Stairways and ladders. Stairs are preferred in areas where there is frequent traffic or where supplies are transported by hand. They shall have risers not exceeding nine

inches and treads wide enough for safety. Where ladders are used, intermediate landings should be provided if the vertical distance exceeds 10 feet. Stairways and ladders shall:

1. Be provided between all floors and in pits or compartments which must be entered and;

2. Have handrails on both sides and treads of nonslip material.

E. Heating. In pump houses not occupied by personnel, only enough heat need be provided to prevent freezing of equipment or treatment process. Provision shall be made for adequate heating for the comfort of the operator and the safe and efficient operation of the equipment.

F. Ventilation. Adequate ventilation shall be provided for all pumping stations. Forced draft ventiliation of at least six changes of air per hour (continuous operation) shall be provided for:

1. All rooms, compartments, pits and other enclosures below the grade floor; and

2. Any area where an unsafe atmosphere may develop or where excessive heat may build up.

G. Dehumidification. In areas where excess moisture could cause hazards to safety or damage to equipment, means for dehumidification shall be provided.

H. Lighting. Pump stations shall be adequately lighted throughout. All electrical work shall conform to the requirements of the state codes.

I. Pumps. At least two pumping units shall be provided. If only two units are provided, each shall be capable of delivering the peak demand. If more than two units are installed, they shall have sufficient capacity so that if any one pump is out of service, the remaining pumps are capable of carrying the peak demand. The pumping units shall:

1. Have ample capacity to supply the peak demand without overloading;

2. Be driven by a prime mover able to operate against the maximum head and air temperature which may be encountered; and

3. Have maintenance parts and tools readily available.

J. Suction lift. If suction lift is necessary, provision shall be made for priming the pumps. Suction lift should be less than 15 feet.

K. Priming. Prime water must not be of lesser sanitary quality than that of the water being pumped. Means shall be provided to prevent back siphonage. When an air operated ejector is used, the screened intake shall draw clean air from a point at least 10 feet above the ground or other source of contamination, unless the air is filtered by an apparatus approved by the Division. Vacuum priming may be used.

12 VAC 5-590-1050. Booster pumps.

A. Booster pumps, except those connected to supply mains not containing service connections and except those taking suction directly from storage facilities, shall be located or controlled so that:

1. They will not produce negative pressure in their suction line;

2. The intake pressure shall be at least 20 psi when the pump is in normal operation;

3. An automatic pressure cutoff or a pressure regulating valve shall be provided to prevent suction line pressure from dropping to below 10 psi; and

4. Automatic or remote control devices shall have a range between the start and cutoff pressure which will prevent excessive cycling.

B. Inline booster pumps. In addition to the other requirements of this section, inline booster pumps shall be accessible for servicing and repairs.

12 VAC 5-590-1060. Automatic and remote controlled stations.

All automatic stations should be provided with an automatic signaling apparatus which will report to a facility manned 24 hours per day when the station is out of service. All remote controlled stations shall be electrically operated and controlled and shall have a signaling apparatus of proven performance. Installation of electrical equipment shall conform with the appropriate state codes.

12 VAC 5-590-1070. Appurtenances.

A. Valves. Pumps shall be adequately valved to permit satisfactory operation, maintenance, and repair of the equipment. If foot valves are necessary, they shall have a net valve area of at least two and one half times the area of the suction pipe and they shall be screened. Each pump shall have a positive acting check valve on the discharge side between the pump and shutoff valve.

B. Piping, in general, shall:

1. Be designed so that the friction head will be low;

2. Not be subject to contamination;

3. Be sloped in one direction to drains;

4. Have adequate cleanouts;

5. Have watertight joints;

6. Be protected against surge or water hammer;

7. Be such that each pump has an individual suction line or the lines shall be so manifolded that they will insure similar hydraulic and operational conditions; and

8. Have proper legends to identify the contents of the pipes (see 12 VAC 5-590-720 L).

C. Gauges and meters. The station should have indicating, totalizing, and recording

metering of the total water pumped. Each pump shall:

1. Have a standard pressure gauge on its discharge line;

2. Have a compound gauge on its suction line; and

3. Have recording gauges in the larger stations as required by the division.

D. Water seals. Water seals shall not be supplied with water of a lesser sanitary quality than that of the water being pumped. Where pumps are sealed with potable water and are pumping water of lesser sanitary quality, the seal shall:

1. Be provided with a break tank open to atmospheric pressure; and

2. Have an air gap between feeder line and spill line of the tank, at least two inches or two pipe diameters, whichever is greater.

E. Controls. Pumps, their prime movers, and all accessories shall be controlled in such a manner that they will operate at their rated capacity without overloading. Where two or more pumps are installed, provision shall be made for proper alternation. Alternation may be automatic or manual. Provision shall be made to prevent operation of the pump during the backspin cycle. Electrical controls should be located above grade.

F. Power. When power failure would result in cessation of the minimum essential service, the power supply shall be provided from at least two independent sources or an auxiliary source shall be provided.

G. Auxiliary power supply. When automatic prelubrication of pump bearings is necessary and an auxiliary power supply is provided, the prelubrication line shall be provided with a valved by-pass around the automatic control.

Article 5. Finished Water Storage Structures.

12 VAC 5-590-1080. General.

The materials and designs used for finished water storage structures shall provide stability and durability as well as protect the quality of the stored water. Steel structures shall follow the current available American Water Works Association standards concerning steel tanks, standpipes, reservoirs, and elevated tanks wherever they are applicable. Other materials of construction are acceptable when properly designed to meet the requirements of this section.

A. Location of finished water storage facilities.

1. The bottom of ground level reservoirs, storage tanks and standpipes should be placed at the normal ground surface.

2. Where the bottom must be below normal ground surface, it shall be placed above the groundwater table. Sewers, drains, standing water, and similar sources of contamination shall be kept at least 50 feet from the reservoir. AWWA approved water pipe, pressure tested in place without leakage, shall be used for gravity sewers at lesser separations.

3. The top of all storage facilities shall not be less than two feet above the normal ground surface and shall be above the 100-year flood level. Clearwells constructed under filters may be excepted from this requirement when the total design gives the same protection.

B. All new finished water storage structures shall have suitable watertight roofs or covers which exclude birds, animals, insects, and dust.

C. No drain on a water storage structure shall have a direct connection to a sewer or storm drain.

All finished water storage structures shall be equipped with separate drains discharging to the atmosphere. Drainage of finished water storage structures to the distribution system through inlet and outlet piping shall not be allowed.

D. The overflow pipe of a finished water storage structure shall be brought down near the ground surface where any discharge will be visible and into a drainage inlet structure or a splash plate which will divert the overflow away from the storage structure. No overflow may be connected directly to a sewer or storm drain.

1. When an internal overflow pipe is used it shall be located in the access tube.

2. The overflow of a ground level finished water storage structure shall be high enough above normal or graded ground surface to prevent the entrance of surface water.

3. All nonpressure type finished water storage structures shall be provided with a downward discharging screened overflow.

E. Finished water storage structures shall be designed with convenient access to the interior for cleaning and maintenance. Manholes or scuttles above the waterline shall be:

1. Framed at least four inches, preferably six inches, above the surface of the roof at the opening; on ground level structures, manholes should be elevated 24 to 36 inches above the top or covering sod;

2. Fitted with a solid watertight cover which overlaps the framed opening and extends vertically down around the frame at leas two inches (shoebox type);

3. Hinged at one side; and

4. Fitted with a locking device.

F. Finished water storage structures shall be vented by separate vent structures. Open construction between the side wall and roof is not permissable.

1. Vents shall prevent the entrance of surface water.

2. Vents shall exclude birds and animals.

3. Vents shall exclude insects and dust, as much as this function can be compatible with effective venting, for elevated tanks and standpipes, four-mesh noncorrodible screen may be used.

4. Vents on ground level structures shall terminate in an inverted U construction the opening of which is 24 to 36 inches above the roof or sod and is covered with noncorrodible screen cloth to exclude insects.

G. The roof and sidewalls of all structures must be watertight with no openings except properly constructed vents, manholes, overflows, risers, drains, pump mountings, control ports, or piping for inflow and outflow.

1. Any pipes running through the roof or sidewall of a finished water storage structure must be welded or properly gasketed in metal tanks or should be connected to standard wall castings which were poured in place during the forming of a concrete structure; these wall castings shall have flanges imbedded in the concrete.

2. Openings in a storage structure roof or top designed to accommodate control apparatus or pump columns shall be curbed and sleeved with proper additional shielding and shoebox type cover to prevent the access of surface water into the structure.

3. Valves and controls shall be located outside the storage structure so that valve stems and similar projections will not pass through the roof or top of the structure.

H. The roof or cover of the storage structure should be well drained, but downspout pipes shall not enter or pass through the reservoir.

I. The safety of employees shall be considered in the design of the storage structure.

As a minimum, such matters shall conform to pertinent building codes, laws, and regulations of the area where the reservoir is constructed.

1. Ladders, ladder guards, balcony railings, and safe location of entrance hatches shall be provided.

2. Elevated tanks with riser pipes over eight inches in diameter shall have protective bars over the riser opening inside the tank.

J. All finished water storage structures and their appurtenances, especially the riser pipes, overflows, and vents, shall be designed to prevent freezing which will interfere with proper functioning.

K. Every catwalk over finished water in a storage structure shall have a solid floor with raised edges so designed that shoe scrapings and dirt will not fall into the water.

L. The area surrounding a ground level structure should be graded in a manner that will prevent surface water from standing within 50 feet of the structure.

M. Proper protection should be given to metal surfaces by paints or other protective coatings, by cathodic protective devices, or both. Paint systems consistent with the most current available American Water Works Association standards and otherwise acceptable to the division shall be used. Cathodic protection should be designed and installed by competent technical personnel.

N. All finished water storage facilities shall be cleaned to remove all dirt and loose materials prior to disinfection of the structure. Only potable water shall be used to clean and rinse the water storage facilities. All equipment including brooms, brushes, spray equipment and workmen's boots shall be disinfected before they are used to clean the storage facilities.

O. All finished water storage facilities shall be satisfactorily disinfected prior to being placed in operation. The disinfection of the storage facilities shall be repeated until it is determined, by bacteriological testing, that the water is free of coliform bacteria.

1. One of the following disinfection methods shall be used. Other methods of disinfection may be approved on a case-by-case basis by the division.

a. The tank shall be filled to the overflow level with potable water to which enough chlorine has been added to produce an initial chlorine concentration of 50 mg/L in the full tank. The full tank should stand for 24 hours; however, in no case shall it stand less than six hours. At the end of the holding period, the chlorinated water shall be drained to waste, the tank refilled with potable water, and tested for satisfactory bacteriological quality before placing the tank in service.

b. All interior surfaces of the tank shall have applied a chlorine solution containing at least 200 mg/L of free available chlorine. The chlorine solution shall be applied with either spray equipment or brushes. Any equipment used to apply the chlorine solution shall either be new or previously used only for

disinfection purposes. The chlorine solution shall remain in contact with the tank surfaces for at least 30 minutes. The tank shall then be filled with potable water to the overflow level and tested for satisfactory bacteriological quality before placing the tank in service; or

c. Potable water containing a free chlorine residual of 50 mg/L shall be placed in the tank to such a depth that when the tank is filled, the resulting chlorine concentration in the water will be at least two mg/L. The water containing 50 mg/L of chlorine shall stand in the tank for 24 hours. The tank shall then be filled with potable water and allowed to stand for 24 additional hours. At the end of the second 24 hour period, the chlorine residual shall be at least two mg/L. After analyses of the water for satisfactory bacteriological quality, the tank may be placed in service without draining the water used to disinfect it.

2. Testing of the water following disinfection shall be in accordance with 12 VAC 5-590-800 C.

12 VAC 5-590-1090. Plant storage.

The applicable design standards of 12 VAC 5-590-1080 shall be followed for plant storage.

A. Washwater tanks shall be sized in conjunction with available pump units and finished water storage to give the backwash water required. Consideration must be given to the possibility of having to wash more than one filter at a time or several filters in succession.

B. Clearwell storage should be sized, in conjunction with distribution system storage, to relieve the filters from having to follow fluctuations in water use or meet peak demands, including filter backwash water. When finished water storage is used to provide proper contact time for chlorine, special attention must be given to size and baffling. Plant clearwells shall be equipped with a raised viewing port having a clear glass or plastic viewing window and a submerged waterproof electric light.

C. Finished water shall not be stored or conveyed in a compartment adjacent to unsafe water when the two compartments are separated by a single wall.

D. Receiving basins and pump wet wells for finished water shall be designed as finished water storage structures.

E. Hydropneumatic (pressure) tanks may be acceptable in small water systems. When used, they shall comply with the requirements of state and local laws and regulations for the construction and installation of unfired pressure vessels.

1. The tank shall be located above the normal ground surface with the tank end containing the inlet pipe, the pressure gauge and other appurtenances projecting into an operating house to prevent freezing or be completely housed.

2. The tank shall have bypass piping to permit operation of the system while the tank is being cleaned, repaired, or painted.

3. Pressure or level-pressure operated start-stop controls shall be installed on the discharge piping to permit operation of the water supply system.

4. Each tank shall have an access manhole, a drain, and control equipment consisting of pressure gauge, water sight glass, automatic or manual air blowoff, pressure and vacuum relief valves and mechanical means for adding air. Appurtenances to small capacity tanks shall be determined by the division on a case-by-case basis.

5. Tanks and pumps shall be designed to minimize pump cycling and shall have at least the following capacity:

a. When the hydropneumatic tank is fed directly by a well or wells, the effective storage volume is one-third of the hydropneumatic tank's gross volume;

b. When the hydropneumatic tank is fed directly from ground storage, the effective storage volume is the effective volume of the ground storage tank plus the effective volume of the hydropneumatic tank; and

c. At least two booster or transfer pumps are required which have a combined capacity to meet the requirements of 12 VAC 5-590-690 C.

12 VAC 5-590-1100. Distribution storage.

The applicable design standards of 12 VAC 5-590-1080 shall be followed for distribution storage.

A. The maximum variation between high and low water levels in finished water storage structures which float on a distribution system should not exceed 30 feet. Large diameter, shallow-depth reservoirs are preferable over small diameter, deep-depth reservoirs.

B. Adequate controls shall be provided to maintain levels in distribution system storage structures at all times.

C. Pressure tanks. (Also see 12 VAC 5-590-1090 E.)

1. A telemetering system and recording equipment should be provided, to a location where qualified personnel are available at all times, for the transmission and recording of storage levels in the distribution system.

2. Altitude valves or equivalent controls may be required for subsequent structures on the system.

3. Overflow, low level, and pump malfunction warnings or alarms should be transmitted to a location where qualified personnel are available for surveillance on a 24-hour basis.

Article 6. Water Distribution Systems.

12 VAC 5-590-1110. Materials.

A. The pipe selected shall have been manufactured in conformity with the current available standards issued by the American Water Works Association if such standards exist or be approved by the National Sanitation Foundation for water distribution piping.

B. In the absence of such standards, pipe meeting applicable commercial standards and acceptable to the division may be considered.

C. Used water mains that meet these standards may be used again after the pipe has been thoroughly cleaned and restored.

D. Packing and joint materials used in the joints of pipe shall meet the standards of the American Water Works Association or the National Sanitation Foundation.

E. Mechanical joints or slip joints with resilient gaskets are preferred.

12 VAC 5-590-1120. Minimum pipe size.

A. The minimum size pipe for water distribution systems shall be four inches in diameter.

Pipes of lesser diameter may be used in the following instances:

1. When the run is less than 300 feet, two-inch pipe may be used; and

2. When the run is less than 600 feet but more than 300 feet, three-inch pipe may be used.

B. The minimum size of pipe where fire protection is to be provided or required shall be six inches in diameter.

C. The standard grading schedule of the Insurance Services Office and other related organizations shall be followed in other cases.

D. Any departure in sizing shall be justified by hydraulic analysis and future water use and can be considered only in special circumstances.

E. Water mains not sized to carry fire flows shall not be connected to fire hydrants.

12 VAC 5-590-1130. System design.

A. Dead-ends should be minimized by looping of all mains.

B. Where dead-end lines occur, they shall be provided with a fire hydrant, flushing hydrant, or blowoff for flushing purposes.

C. No flushing device shall be directly connected to any sewer.

12 VAC 5-590-1140. Installation of water mains.

A. Adequate supports shall be provided for all pipes.

B. A continuous and uniform bedding shall be provided in the trench for all buried pipe.

C. Stones and rocks found in the trench shall be removed for a depth of at least six inches below the bottom of the pipe and selected fill bedding provided.

D. The specifications for installation shall include:

1. Pressure testing on installed pipe;

2. Allowable leakage of installed pipe; and

3. Reference to applicable American Water Works Association standards or manufacturers' recommended installation procedures.

E. Any plastic or other nonmetallic pressurized conduit installed underground shall have affixed thereto a material conductive of electricity or some other means of locating the conduit while it is underground.

12 VAC 5-590-1150. Separation of water mains and sewers.

A. The following factors shall be considered in providing adequate separation of water mains and sewers:

1. Materials and types of joints for water and sewer mains;

2. Soil conditions;

3. Service branch connections into the water main and sewer mains;

4. Compensating variations in the horizontal and vertical separations;

5. Space for repairs and alterations of water and sewer mains;

6. Offsetting of pipes around manholes; and

7. Identification of the physical restraints preventing normal separation.

B. Parallel installation.

1. Under normal conditions water mains shall be laid at least 10 feet horizontally from a sewer or sewer manhole. The distance shall be measured edge-to-edge.

2. Under unusual conditions when local conditions prevent a horizontal separation of 10 feet, the water main may be laid closer to a sewer or sewer manhole provided that:

a. The bottom (invert) of the water main shall be at least 18 inches above the top (crown) of the sewer;

b. Where this vertical separation cannot be obtained, the sewer shall be constructed of AWWA approved water pipe, pressure tested in place without leakage prior to backfilling; and

c. The sewer manhole shall be of watertight construction and tested in place.

C. Crossing.

1. Under normal conditions water lines crossing sewers shall be laid to provide a separation of at least 18 inches between the bottom of the water line and the top of the sewer whenever possible.

2. Under unusual conditions when local conditions prevent a vertical separation described in subdivision C 1 of this section, the following construction shall be used:

a. Sewers passing over or under water mains shall be constructed of the materials described in subdivision B 2 b of this section; and

b. Water lines passing under sewers shall, in addition, be protected by providing:

(1) A vertical separation of at least 18 inches between the bottom of the sewer and the top of the water line;

(2) Adequate structural support for the sewers to prevent excessive deflection of the joints and the settling on and breaking of the waterline; and

(3) That the length of the water line be centered at the point of the crossing so that joints shall be equidistant and as far as possible from the sewer.

D. No water pipes shall pass through or come in contact with any part of a sewer manhole.

12 VAC 5-590-1160. Valve, air relief, meter, and blowoff chambers.

A. Air and sediment accumulations may be removed through a standard fire hydrant; compressed air and pumping may be used for dewatering mains through hydrants.

B. Chambers or pits containing valves, blowoffs, meters, or other such appurtenances to a distribution system shall not be connected directly to any storm drain or sanitary sewer, nor shall blowoffs or air relief valves be connected directly to any sewer.

C. Such chambers or pits shall be drained to the surface of the ground where they are not subject to flooding by surface water or to absorption pits located above the seasonal groundwater table elevation. Sump pumps may be used where other means are not practicable.

D. The open end of an air relief pipe shall be extended from the manhole or enclosing chamber to a point at least one foot above ground and provided with a screened, downward facing elbow.

12 VAC 5-590-1170. Hydrants.

A. Where hydrant drains are not plugged, they shall be drained to the ground surface or to dry wells provided exclusively for this purpose.

B. Hydrant drains shall not be connected to sanitary sewers or storm drains.

C. Fire hydrants shall be connected only to water systems adequately designed for fire flows in addition to domestic flow.

12 VAC 5-590-1180. Surface water crossings.

Surface water crossings, both over and under water, present special problems and should be discussed with the division before final plans are prepared.

A. Above water crossings.

The pipe above water crossings shall be:

1. Adequately supported;

2. Protected from freeze damage;

3. Accessible for repair or replacement; and

4. Above 100-year flood level.

B. Under water crossings.

1. The pipe shall be of special construction, having flexible watertight joints.

2. Valves shall be provided at both ends of the water crossing so that the section can be isolated for tests or repair; the valves shall be easily accessible and not subject to flooding.

3. Sample taps shall be available at each end of the crossing and at a reasonable distance from each side of the crossing and not subject to flooding.

4. Permanent taps shall be made for testing and locating leaks.

12 VAC 5-590-1190. Water services and plumbing.

Water services and plumbing shall conform to the Uniform Statewide Building Code.

12 VAC 5-590-1200. Water pressure in systems.

The system shall be designed to maintain a minimum pressure of 20 psi in the distribution system at the design flow (see 12 VAC 5-590-690 C). Where the pressure at the service tap exceeds 80 psi, the provisions of the Uniform Statewide Building Code shall apply.

12 VAC 5-590-1210. Disinfection of water mains.

A. All water mains shall be disinfected prior to being placed in operation.

B. Prior to disinfection all water mains shall be flushed unless the tablet method of disinfection is used. All valves and hydrants shall be operated during this operation. Flushing velocities should not be less than 2.5 feet per second.

C. Methods of chlorine application.

1. Continuous feed method - Potable water shall be introduced into the pipe main

at a constant flow rate. Chlorine shall be added at a constant rate to this flow so that the chlorine concentration in the water in the pipe is at least 50 mg/L. The chlorinated water shall remain in the main at least 24 hours, after which, the chlorine concentration in the water shall be at least 10 mg/L. All valves and appurtenances shall be operated while the chlorinated water remains in the main;

2. Slug method - Potable water shall be introduced into the main at a constant flow rate. This water shall receive a chlorine dosage which will result in a chlorine concentration of 100 mg/L in a "slug" of the water. The chlorine shall be added long enough to insure that all portions of the main are exposed to the 100 mg/L chlorine solution for at least three hours. The chlorine residual shall be checked at regular intervals not to exceed 2,000 feet to insure that adequate residual is maintained. As the chlorinated water passes valves and appurtenances, they shall be operated to insure disinfection of these appurtenances; or

3. Tablet method - Tablets shall be placed in each section and in all appurtenances. Enough tablets shall be used to insure that a chlorine concentration of 25 mg/L is provided in the water. They shall be attached by an adhesive to the top of the pipe sections and crushed or rubbed in all appurtenances. The adhesive shall be acceptable to the division. The velocity of the potable water in the main shall be less than 1 foot per second. The water shall then remain in contact with the pipe for 24 hours. All valves and appurtenances shall be operated while the chlorinated water is in the main.

This method shall not be used if nonpotable water or foreign materials have entered the mains or if the water temperature is below 5°C (41°F).

D. Final flushing.

After the required retention period, the chlorinated water shall be flushed from the main using potable water.

E. Testing.

After the mains have been flushed, the water mains shall be tested in accordance with 12 VAC 5-590-800 C. Samples shall be collected at regular intervals, not exceeding 2,000 feet, throughout the length of main.

F. Repairs.

Cleaning, disinfecting, flushing, testing, or similar operational actions shall be in accordance with the current standard issued by AWWA (AWWA C-601).

12 VAC 5-590-1220. Cover.

All distribution mains shall be provided with sufficient earth or other suitable cover to prevent freezing.

12 VAC 5-590-1230. Metering.

Each service connection should be metered.

PART IV. EXCEPTIONS FOR NONCOMMUNITY WATERWORKS TO SPECIFIC SECTIONS OF THE MANUAL OF PRACTICE (PART III).

12 VAC 5-590-1240. General.

Noncommunity waterworks design shall conform to Part III of this chapter. Due to the types of service provided and size of some noncommunity waterworks, certain exceptions to the design requirement specified in Part III may be allowed. Each of the following subsections will refer to exceptions in corresponding sections of Part III.

12 VAC 5-590-1250. Exceptions to Article 1 of Part III.

A. The evaluation of source requirements shall consider the type and use of the noncommunity system. Minimum storage for noncommunity waterworks, in conjunction with the source, must provide system peak hour demand.

B. A minimum laboratory facility of a sink and workbench shall be provided.

12 VAC 5-590-1260. Exceptions to Article 2 of Part III.

A. Exceptions to the minimum size well lot may be made for noncommunity waterworks, based upon site availability and other factors.

B. When the source requirements for a noncommunity system are determined to be three gallons per minute or less the 48-hour minimum drawdown test may be reduced to no less than eight hours. The drawdown test, approved by the division and based upon system demands and geological conditions, shall be performed to determine well yield.

12 VAC 5-590-1270. Exceptions to Article 5 of Part III.

When booster pumping is required for small noncommunity systems, the duplicity and capacity requirements may be reduced in accordance with the type and size of system served.

12 VAC 5-590-1280. Exceptions to Article 6 of Part III.

In the instance where a noncommunity water system serves a single building, the water line plumbing (including size) shall be in accordance with the most recent edition of the Uniform Statewide Building Code.

When a noncommunity water system serves two or more buildings, the water line shall be of sufficient size to provide adequate flow and pressure in order to meet the system demands.

APPENDIX A. [RESERVED]

APPENDIX B. BACKGROUND USED IN DEVELOPING THE CHEMICAL, PHYSICAL AND RADIOLOGICAL LIMITS OF THE DRINKING WATER STANDARDS.

COPPER

ACTION LEVEL--1.3 mg/L

Copper is an essential and beneficial element in human metabolism. The daily copper requirement for adults has been estimated to be 2.0 mg. Preschool age children require about 0.1 mg daily for normal growth. Copper at high doses has, however, been shown to cause stomach and intestinal distress, liver and kidney damage, and anemia.

A primary source of high concentrations of copper in drinking water is from the internal corrosion of copper plumbing within the home. The EPA has established an action level of 1.3 mg/L of copper in first draw tap sample which may result in public waterworks installing measures to control corrosion.

CORROSION

Corrosion is responsible for many problems in the water distribution system including tuberculation with loss of carrying capacity and increased pumping costs, leaks, main ruptures, discoloration and loss of chlorine residual. The corrosivity of drinking water is a parameter which has not only esthetic and economic significance, but is health significant as well. The products of corrosion having the greatest health significance at the present time, cadmium and lead, are addressed as primary maximum contaminants, but there is also a sufficient basis to include corrosivity as a secondary maximum contaminant level.

Corrosivity is controlled by pH adjustment, the use of chemical stabilizers, or other means which are dependent upon the specific conditions of the water. The two major corrosion indicators utilized in Virginia are the Langelier Index (L.I.) and the Aggressive Index (A.I.). Other indicators also exist. The L.I. and A.I. are determined by utilizing some or all of the following parameters:

- pH
- Calcium Hardness
- Alkalinity
- Temperature
- TDS

All waterworks owners will be notified periodically of the corrosivity of their drinking water by the commissioner, either as L.I., A.I. or other appropriate index. Noncorrosive water should be the goal of each waterworks owner.

Furthermore, EPA requires each owner to be aware of type of materials used in the distribution system (including service connections and household plumbing) such as

:

LEAD

Pipe
Solder
Caulking
Lining of Distribution Mains
Household Plumbing

COPPER

Piping
Service Lines
Household Plumbing

GALVANIZED

Service Lines
Household Plumbing

Ferrous Piping (cast iron and steel)
Asbestos Cement Pipe
Vinyl Lined Asbestos Cement Pipe
Coal Tar Lined Pipes
Plastic Pipe
Piping
Service Line
Household Plumbing

FLUORIDE

When the fluoride concentration in drinking water is maintained within the recommended ranges of 0.8 mg/L minimum and 1.0 mg/L maximum with the optimum being 0.9 mg/L, the consumer will realize a reduction in dental caries. When supplemental fluoridation is practiced, it is particularly advantageous to maintain a fluoride concentration at or near the optimum. The reduction in dental caries experienced at optimal fluoride concentrations will be diminished by as much as 50% when the concentration is 0.2 mg/L below the optimum. An approval limit slightly higher than the optimum can be tolerated without any mottling of teeth, so where fluorides are native to the water supply, these concentrations are acceptable. Higher levels should be reduced by treatment or blending with other sources lower in fluoride content. The U.S. Environmental Protection Agency has determined that the PMCL for fluoride is 4.0 mg/L based on long term toxicity data. The EPA has also determined that the SMCL for fluoride is 2.0 mg/L based on the potential formation of cosmetically objectionable dental fluorosis as a result of long term exposure. The level of the SMCL was based on a balancing of the beneficial and undesirable effects of fluoride.

FOAMING AGENTS

Foaming is an undesirable property of drinking water because it is esthetically displeasing and therefore should be absent. Because no convenient standardized

formability test exists, and because surfactants are one major class of substances that cause foaming, this property is determined indirectly by measuring the anionic surfactant concentration of substances measured by the methylene blue method and should not exceed 0.5 mg/L as methylene blue active substances (MBAS).

LEAD

ACTION LEVEL - 0.015 mg/L

Lead is a toxic metal that tends to accumulate in the bone of man and animals. Signs of lead intoxication include gastrointestinal disturbances, fatigue, anemia, muscular paralysis, and encephalopathy. Irreversible damage to the brain is the frequent result of lead intoxication in children because of their eating lead containing paint still found in older homes. The most serious effects on the nervous system are seldom seen in the adult population however.

Household plumbing has been identified as a significant contributor of lead to our drinking water; therefore; any notice to the public concerning lead should advise persons served by the system to use only the cold water faucet for drinking and for use in cooking or preparing baby formula, and to run the water until it gets as cold as it is going to get before each use. If there has recently been major water use in the household, such as showering or bathing, flushing toilets, or doing laundry with cold water, flushing the pipes should take 5 to 30 seconds, if not, flushing the pipes could take as long as several minutes. Each notice (see 12 VAC 5-590-520 A 8) should also advise persons served by the system to check to see if lead pipes, solder, or flux have been used in plumbing that provides tap water and to ensure that new plumbing and plumbing repairs use lead free materials.

The EPA's national primary drinking water regulation requires all public water systems to optimize corrosion control to minimize lead contamination resulting from the corrosion of plumbing materials. Public water systems serving 50,000 people or fewer that have lead concentrations below 15 parts per billion (ppb) in more than 90% of tap water samples (the EPA "action level") have optimized their corrosion control treatment. Any water system that exceeds the action level must also monitor their source water to determine whether treatment to remove lead in source water is needed. Any water system that continues to exceed the action level after installation of corrosion control and/or source water treatment must eventually replace all lead service lines contributing in excess of 15 ppb of lead to drinking water. Any water system that exceeds the action level must also undertake a public education program to inform consumers of ways they can reduce their exposure to potentially high levels of lead in drinking water.

NITRATE

Nitrate nitrogen (NO_3-N) levels not exceeding 20 mg/L may be allowed in a noncommunity waterworks if the owner demonstrates:

1. Such water will not be available to children under 6 months of age; and
2. There will be continuous posting of the fact that NO_3-N levels exceed 10 mg/L

and the potential health effects of exposure; and

3. Health officials will be notified annually of NO_3-N levels that exceed 10 mg/L; and

4. No adverse health effects will result.

NOTE: Nitrite in water poses a greater health hazard but fortunately it seldom occurs in high concentrations. Waters with nitrite-nitrogen concentrations over 1 mg/L should not be used for infant feedings.

MANMADE RADIONUCLIDES

To determine compliance with subsection B of Table 2.5, the detection limits shall not exceed the concentrations listed in the following table:

DETECTION LIMITS FOR MAN-MADE BETA PARTICLE PHOTON EMITTERS	
RADIONUCLIDE	DETECTION LIMIT
Tritium	1,000 pCi/L
Strontium-89	10 pCi/L
Strontium-90	2 pCi/L
Iodine-131	1 pCi/L
Cesium-134	10 pCi/L
Gross Beta	4 pCi/L
Other radionuclides	1/10 of the applicable limit

RADIONUCLIDES

To determine compliance with subsection B of Table 2.5, the detection limits shall not exceed the concentrations listed in the following table:

DETECTION LIMITS FOR GROSS ALPHA PARTICLE ACTIVITY, RADIUM-226, RADIUM-228, AND URANIUM	
Contaminant	Detection Limit
Gross alpha particle activity	3 pCi/L
Radium-226	1 pCi/L
Radium-228	1 pCi/L
Uranium	1 μg/L

TURBIDITY

Operational requirement: Conventional water filtration plants utilizing surface waters as a source of supply are capable of producing filtered water with a turbidity consistently

less than 0.1 NTU. Therefore, for water filtration plants the filter effluent turbidity for each filter, before any post-filtration chemical addition, operational limit is 0.1 NTU.

APPENDIX C. FIELD OFFICE COUNTIES AND CITIES SERVED.

Regional Office	Counties and Cities Served
ABINGDON	
454 E. Main Street P.O. Box 1985 Abingdon, VA 24210 703-628-5161	Planning Districts 1, 2, 3, and 4
CULPEPER	
102 N. Main Street 3rd Floor Culpeper, VA 22701 703-825-6772	Planning Districts 8, 9, & 16
DANVILLE	
1347 Piney Forest Road Danville, VA 24540 804-791-5222	Planning Districts 11, 12, 13, & 14
LEXINGTON	
129 S. Randolph Street Lexington, VA 24450 703-463-7136	Planning Districts 5, 6, 7, and 10
RICHMOND	
1500 E.Main Street, Room 109, P.O. Box 2448, Richmond, VA 23218 804-662-9530	
SOUTHEAST VIRGINIA	

5700 Thurston Avenue
Suite 203
Virginia Beach, VA 23455
804-363-3876

Planning Districts 19, 20, 21, and 22

APPENDIX D. [RESERVED]

APPENDIX E. [RESERVED]

APPENDIX F. [REPEALED]

APPENDIX G. MONITORING AND REPORTING.

Analytical laboratory control testing, monitoring, and analyses at waterworks are made to control plant operation, to record plant performance, and to monitor conditions in the distribution system. Test results properly recorded, compiled and reported can be invaluable in improving plant performance, efficiency and cost effectiveness. Operational control testing should present evidence that the water has been properly prepared for each step in the treatment process. Testing should provide evidence that each process has proceeded according to its intended purpose and that finished water is clean, free from taste and odor, free from undesirable chemicals and considered safe.

Analytical equipment used to determine compliance with 12 VAC 5-590-510 D shall be of the laboratory type (continuous monitoring equipment may be acceptable if demonstrated to be accurate by correlation with a laboratory type instrument each shift) approved for use at the waterworks per 12 VAC 5-590-760.

These suggested monitoring and reporting requirements should be used as a guide in preparing, modifying, and reviewing operation monthly reports.

The field office of the Office of Water Programs will notify in writing each individual waterworks of the operation monthly report requirements and supply the waterworks with a standard example report form or will assist in the development of system specific report forms.

The following are suggested operation monthly report requirements that should be reported to the appropriate field office:

ALL SURFACE WATER SYSTEMS:

Number of hours in operation

- hours per day in operation

Raw water treated

- gpd and monthly total at each entry point

Finished water produced

- gpd and monthly total

Finished water used for treatment process

- monthly total

Finished water delivered to consumers

- monthly total

accountability (water lost) in distribution system

- percentage

Raw water temperature

- average °C or °F

Number of connections

- monthly average

Population served

- monthly average

Treatment plant maintenance activities

- brief summary of major activities

Chemical feeder laboratory and instrument calibration as appropriate

- quarterly for each chemical feeder or instrument unless specified elsewhere, i.e., fluoride feeders or manufacturer recommended

Waterworks not requiring operators in attendance whenever the plant is in operation may reduce some of the daily requirements.

WATERWORKS THAT PROVIDE DISINFECTION BY CHLORINATION:

Water plant monitoring:

Chlorine compound used

- liquid, dry, calcium hypochlorite or sodium hypochlorite

Amount of chlorine compound used at each application point

-daily gallons or pounds

Date chlorine compound replenished

- for each application point

Free chlorine residual testing after the chlorine contact period

- every two hours of plant operation for waterworks requiring operators in attendance whenever the plant is in operation (see 12 VAC 5-590-440 B). Records must be kept of each residual determination. The daily lowest/highest residuals measured and the number of measurements taken should be reported.

- once per day for waterworks providing treatment or only disinfection and serving 400 or more persons and not requiring operators in attendance whenever the plant is in operation.

- frequency for waterworks providing only disinfection and serving less than 400 persons shall be set by the division on an individual basis.

- daily or at the same time as chlorine residual testing if less than daily.

Distribution system monitoring:

Free chlorine testing

- seven days per week for waterworks serving 400 or more persons
- five days per week for waterworks serving less than 400 persons
- number of tests per test day and test locations shall be set by the division on an individual basis. Records must be kept of each residual determination. The lowest, highest and average residuals measured and the number of measurements taken should be reported.

Total chlorine residual testing

- once per week at locations reflecting the maximum residence time of the water in the system
- number of tests per test day and test locations shall be set by the division on an individual basis. Records must be kept of each residual determination. The average residual measured and the number of measurements should be reported.

pH

- daily or at the same time of chlorine residual testing if less than daily.

NOTE: If the system performs disinfection utilizing the combined chlorine residual process, total residual testing should be substituted for free residual testing.

WATERWORKS EMPLOYING TURBIDITY REMOVAL:

Raw water monitoring:

pH

- electrometrically, every two hours

Alkalinity

- total, once per shift

Hardness

- total, once per shift

Turbidity

- NTU, every two hours

Raw water chemical treatment:

Coagulant

- type, weight applied, dosage

Coagulant aids

- type, weight applied, dosage

Stabilizing chemicals

- type, weight applied, dosage

Taste and odor control chemicals

- type, weight applied, dosage

Treated water (postflash mix) monitoring:

pH

- electrometrically, twice per shift

Coagulation control

- set on an individual basis

Alkalinity

- total, once per shift

Settled water (applied water) monitoring:

Turbidity

- NTU, must be from each sedimentation basin for high rate, may be from top of filter for rapid rate, every two hours

Chlorine residual

- type and daily average, every two hours

Settled water (applied water) chemical treatment:

Chemical

- type, weight applied and dosage

Filter aids

- type, weight applied and dosage

Filtered water monitoring:

Turbidity

- NTU, from each filter, every two hours, report maximum for the day

Filter operation:

Filters in operation

- number

Filter run time

- number hours between backwashes

Head loss

- each filter, end of each day or prior to backwash

Backwash time

- average, minutes

Backwash rate

- maximum, gpm

Backwash water

- gallons used

Rewash time

- if provided, average, minutes

Filter drop test results

- each filter tested quarterly

Filter rise rate test results

- each filter tested semiannually

Filtered water chemical treatment:

Stabilizing chemical

- type, weight applied per day, average dosage

Finished water monitoring:

pH

- electrometrically, every two hours

Alkalinity

- total, once per shift

Hardness

- total and calcium, once per shift

Turbidity

- NTU, every two hours

Chlorine residual

- every two hours low/high average

NOTES:

1. Daily averages and highest daily reading of the results of the required number of tests or measurements should be reported except for filtered water turbidity. Records of each test should be kept.

2. Frequency of testing is on a per shift basis unless otherwise indicated.

3. Number of tests per shift shall be set by the division on an individual basis.

4. Exact location of sample collection or testing shall be set by the division on an individual basis.

5. Where multiple sources are available, raw water data must be reported for each source.

WATERWORKS PRACTICING RECYCLE:

Recycle flow monitoring:

- total flows recycled, gallons
- average and maximum return rate of combined recycle flows

WATERWORKS FLUORIDATING:

Type of compound used

- chemical name

Amount of compound used at each application point

- pounds, daily

Feeder calibration date

- monthly

Hardness of water applied to sodium fluoride saturate feeders (where softners is required)

- weekly

Fluoride ion concentration in finished water

- one test per shift, minimum of one daily (monthly split sample with DCLS)

Fluoride ion concentration in the distribution system where two or more entry points contain fluoride

- frequency and location of tests shall be set by the division on an individual basis, both the minimum and maximum values must be reported

WATERWORKS EMPLOYING SOFTENING:

Lime, excess lime, and excess lime-soda processes:

- type, frequency and location of tests shall be set by the division on an individual basis

Cation exchange process:

Ion exchange material

- type, trade name

Regeneration

- date and method, each unit

Backwashing

- date and duration of washing, each unit

Softener influent hardness

- daily, each source

Softener effluent hardness

- daily, each unit

Blended water hardness

- daily, where appropriate

Stabilization chemical

- type, weight, applied daily dosage, stablized pH, alkalinity, hardness

WATERWORKS EMPLOYING IRON AND MANGANESE CONTROL:

Removal by oxidation using continuous potassium permanganate regeneration, detention, and filtration:

Raw water iron and manganese concentrations

- daily, each source

Pre-oxidation chemical (usually chlorine prior to application of permanganate)

- type, amount applied daily at each source and average dosage

Iron and manganese concentration prior to application of permanganate

- daily

Potassium permanganate

- amount applied daily and average dosage

Filter influent iron and manganese concentrations

- daily, each filter

Filter effluent iron and manganese concentrations

- daily, each filter

Removal by ion exchange:

Ion exchange material

- type, trade name

Regeneration

- date, each unit and method

Backwashing

- date and duration of washing each unit

Raw water iron and manganese concentrations

- daily, each source

Exchange unit iron and manganese influent concentrations

- daily, each unit

Exchange unit iron and manganese effluent concentrations

- daily, each unit

NOTES:

1. Ion exchange process may also remove barium and radium which should be included or substituted in reporting.

2. Testing for other removal processes will be set by the division on an individual basis.

WATERWORKS EMPLOYING STABILIZATION BY:

The addition of carbon dioxide or acid to waters treated with excess lime for softening or manganese removal;

The addition of an alkali to reduce free carbon dioxide;

The addition of either soda ash or caustic soda to produce the desired calcium carbonate film where the alkalinity exceeds 35 mg/L;

The addition of lime to produce the desired calcium carbonate film where the water is soft;

The addition of a mixture of lime and soda ash to produce the desired calcium carbonate film where the water is soft and has a low carbon dioxide content;

The addition of polyphosphates for sequestering dissolved minerals.

Each chemical addition process should be monitored to determine the effectiveness of stabilization treatment and concentration of chemicals in the treated water. The type, frequency, and location of tests shall be set by the division on an individual basis.

WATERWORKS EMPLOYING TASTE AND ODOR CONTROL BY:

The addition of copper sulfate or other copper compounds to the reservoir;

The addition of activated carbon to the shallow areas of the reservoir;

The addition of potassium permanganate, chlorine, chlorine dioxide, or oxygen through aeration to the raw water;

The addition of powdered activated carbon to the treatment process at various locations; or

The use of granular activated carbon absorption units.

Each process should be monitored to ensure the threshold odor number does not exceed three. The dosage or application rates should be monitored to ensure correct control. The type, frequency, and location of tests and the reporting of usage shall be set by the division on an individual basis.

WATERWORKS EMPLOYING COLOR REMOVAL:

Raw water color -	platinum - cobalt method
Settled water color -	platinum - cobalt method
Finished water color -	platinum - cobalt method

Monitoring, reporting, and frequencies shall be set by the division on an individual basis.

CONSECUTIVE WATERWORKS:

Finished water purchased

- gallons per month per source

Finished water delivered to consumers

- gallons per month

Accountability

- percentage

Number of connections

- monthly average

Population served

- monthly average

Free chlorine residual testing in the distribution system

- same as for waterworks that provide disinfection by chlorination

Total chlorine residual testing in the distribution system

- same as for waterworks that provide disinfection by chlorination

APPENDIX H. [REPEALED]

APPENDIX I. SUGGESTED OUTLINE OF CONTENTS OF A CROSS CONNECTION CONTROL PROGRAM.

Adopted ordinance (municipalities) - Make part of the program

Administration - name of individual responsible to carry out requirements of the program.

Procedures:

1. New facilities.
2. Existing facilities.

Records:

1. Locations of devices and types.
2. Inspections/questionnaires.
3. Testing and maintenance.

Notification:

1. Inspections of new and existing facilities.
2. Testing due.
3. Test results.
4. Device or means required.
5. Violations.
6. Termination or denial of service.

Reporting - procedures to follow in the event of or suspicion of contamination through a cross connection.

Backflow prevention device tester list.

Approved devices list.

Consumer education literature.

SUGGESTED OUTLINE OF CONTENTS OF AN ORDINANCE FOR A CROSS CONNECTION CONTROL PROGRAM

Purpose of the ordinance - to eliminate cross connections and protect the public health.

Authority for ordinance - required by waterworks regulations.

Administration of the ordinance:

1. Who is responsible to carry out the requirements of the ordinance, by position?
2. Reference to an established program or policy procedures.

3. Responsibility to carry out the program or policy.

Enforcement of the ordinance:

1. Right of entry for inspection or testing.
2. Right to terminate or deny service.
3. Notice of violations.
4. Penalties.

Definitions - those in 12 VAC 5-590-20 of Article 1 of Part I which apply.

General requirements of purveyor and consumer - applicable provisions of Article 3 of Part II should be adopted and included as part of the ordinance. Modifications should be made to identify specific responsibilities.

APPENDIX J. BACTERIOLOGICAL SAMPLE-SITING REPORT.

BACTERIOLOGICAL SAMPLE-SITING REPORT

Name of Water System:

PWS ID:

Address:

Purpose: The purpose of this sample-siting plan is to identify specific bacteriological sample locations which are representative of the water quality throughout the distribution system.

Sample-Siting Plan:

1) The _____ waterworks is currently required to collect _____ water sample(s) for coliform analysis each month(quarter). Three different sampling locations are identified for each required sample for a total of _____ locations.

2) The ____ sample locations are identified below and are shown of the attached system piping map.

No 1 = >

No 2 = >

No 3 = >

No 4 = >

No 5 = >

No 6 = >

No 7 = >

No 8 = >

No 9 = >

No 10 = >

No 11 = >

No 12 = >

3) Routine bacteriological samples will be collected from each of the above locations on a rotating basis.

4) These sample locations are chosen to allow for the collection of required upstream and downstream repeat sample within 5 service connections.

Owner Name: _____

Signature: _____

Title: _____

Date: _____

------ -------

APPROVAL BLOCK FOR

DIVISION OF WATER SUPPLY ENGINEERING

------ -------

APPENDIX K. COLIFORM VIOLATION DETERMINATION.

COLIFORM VIOLATION DETERMINATION*

Definitions
- **PWS = Waterworks**
- **TC = Total Coliform**
- **TC+ = Total Coliform Positive**
- **FC = Fecal Coliform**
- **EC = E. Coli**
- **M/R = Monitoring/Reporting**

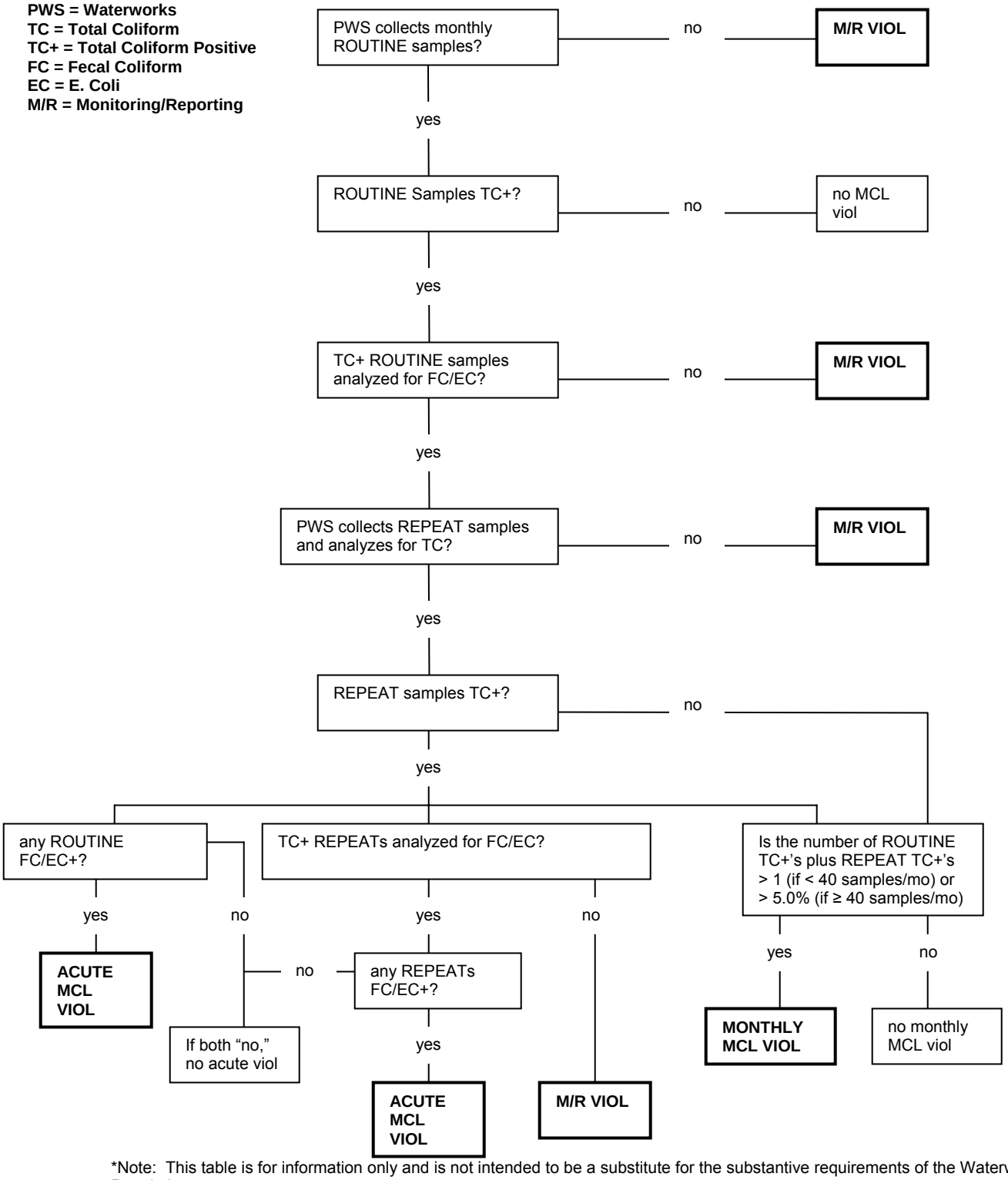

*Note: This table is for information only and is not intended to be a substitute for the substantive requirements of the Waterworks Regulations.

APPENDIX L. DETERMINATION OF CT.

Disinfection Criteria

A treatment system must provide a minimum 3-log (99.9%) reduction of Giardia cysts and a 4-log (99.99%) reduction of viruses, respectively. Table L-1 lists the log removal credits associated with four filtration processes and the inactivation levels that must be achieved by disinfection.

Determination of Compliance With Inactivation

To determine compliance with the inactivation requirements, a system must comply with the CT value(s) that is (are) based on disinfection conditions in the system during peak hourly flow. The "T" is the time in minutes it takes for the water during peak hourly flow to move between the point of disinfectant application and a point where "C", the residual concentration in mg/L, is measured before the water reaches the first customer. Contact time may be determined either by calculations, tracer studies, or an equivalent method as approved by the office. The contact time to be used for calculating CT is T_{10}, which is defined as the detention time at which 90 percent of the water passing through a unit is retained within that unit (e.g. mixing basins, sedimentation basins, clearwells, storage reservoirs, etc.)

Systems with only one point of disinfectant application may determine the total inactivation on the basis of residual measurements at a single point prior to the first customer or at several points within the treatment train after the point of disinfectant application. In the latter instance, the residual profile is determined and the total inactivation is calculated as follows: (1) Determine the disinfectant residual, C, in mg/L at any number of points within the treatment train; (2) Determine the travel time, T, in minutes between the point of disinfectant application and the point where C is measured within the first section. For subsequent measurements of C, T is the time required for water to move from the previous residual-measurement point to the next; (3) Calculate CT corresponding to each residual measurement point (CT_{calc}); (4) Determine the log inactivation for each section; and (5) Sum the log inactivations for each section to determine the total log inactivation. Tables L-2 through L-7 give CT values required for 99.9 percent inactivation (3 logs) of Giardia cysts at various pHs and temperatures. Tables L-9 through L-15 give CT values required for Giardia cysts and viruses at various temperatures using free chlorine, chlorine dioxide, chloramines and ozone. The minimum expected temperature and the maximum expected pH should be used for the calculations. Generally, if the CT required for 3-logs inactivation of Giardia cycts is achieved, the CT required for 4-logs inactivation of viruses is also achieved.

Determination of Disinfectant Contact Time

The time within contact units (including mixing basins and storage reservoirs) that is to be used in calculations of CT should be the T_{10} value, as defined earlier. This value can be determined either by calculations that involve the theoretical hydraulic detention time (volume divided by flow rate) and factors that account for the degree of short-

circuiting that might be expected through any given unit or by tracer studies.

When T_{10} values are calculated, the theoretical, hydraulic detention time in a particular unit is reduced by some fraction, the magnitude of which is dictated by the degree of short-circuiting that is possible within that unit. The significant design characteristics that determine the degree of short-circuiting include the length-to-width ratio, the degree of baffling within the basins, and the effect of inlet-baffling and outlet - weir configurations. The use of these factors to obtain a T_{10} value effectively reduces the magnitude of T for use in CT calculations so that achieving a required CT requires the application of more disinfectant (i.e. a higher concentration).

The purposes of baffling are to (1) maximize utilization of basin volume, (2) increase the plug-flow zone in the basin, and (3) minimize short-circuiting. Three general classifications of baffling conditions (poor, average, and superior) have been developed to categorize the results of tracer studies for use in T_{10} determinations. The T_{10} /T ratios associated with each degree of baffling are summarized in Table L-8.

The three types of basin inlet baffling configurations are: a target-baffle pipe inlet, an overflow weir entrance, and a baffled, submerged orifice or port inlet. Typical intra-basin baffling structures include: diffuser (perforated) walls; launders; cross-, longitudinal-, or maze- baffling to cause either horizontal or vertical serpentine flow; and longitudinal divider walls, which prevent mixing by increasing the length-to-width ratio of the basins. Commonly used baffled outlet structures include free-discharging weirs, such as sharp-crested and V-notch, and submerged ports or weirs. Weirs that do not span the width of the basin, such as Cipolleti weirs, should not be used, as they may substantially increase weir overflow rates and the dead-space zone within the basin. Figures L-I through L-VI give examples of poor, average, and superior baffling conditions for rectangular and circular tanks.

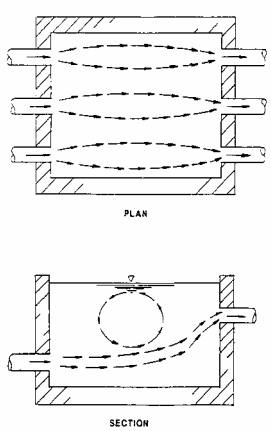

Figure L-1 Poor Baffling Condition – Rectangular Contact Basin

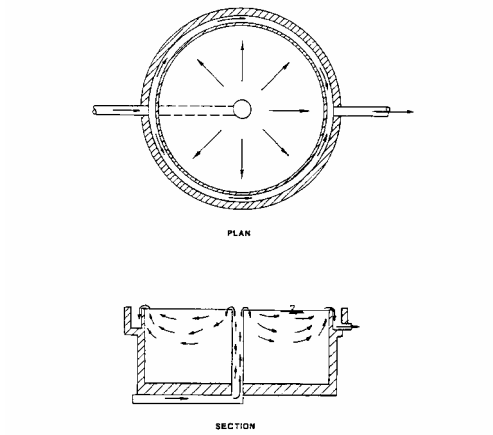

Figure L-2 Poor Baffling Condition – Circular Contact Basin

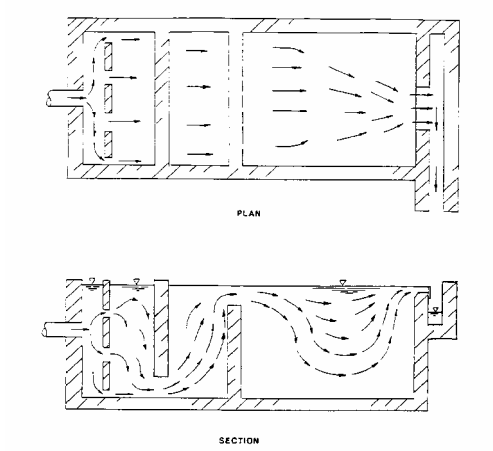

Figure L-3 Average Baffling Condition – Rectangular Contact Basin

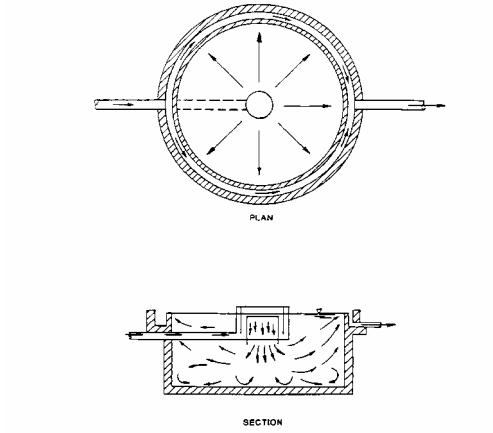

Figure L-4 Average Baffling Condition – Circular Contact Basin

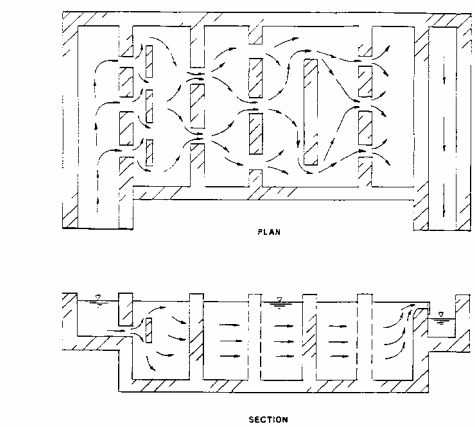

Figure L-5 Superior Baffling Conditions – Rectangular Contact Basin

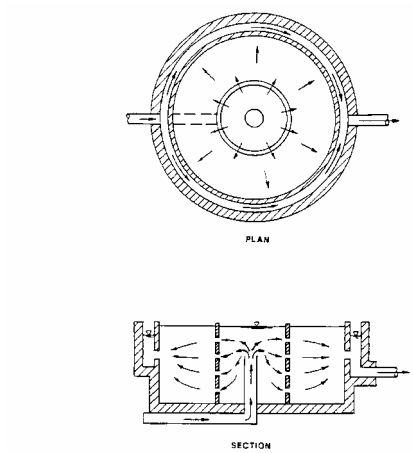

Figure L-6 Superior Baffling Conditions – Circular Contact Basin

The following is a sample problem based on the inactivation tables and T_{10} values calculated from information regarding the design features of the contact unit and the theoretical detention time. The disinfectant in this example is chlorine which is added just prior to the contact unit and the flow rate, pH, chlorine residual, and water temperature are assumed to be 1.5 MGD, 7.5, 1.0 mg/L, and 5 degrees C, respectively. The contact unit has a baffled inlet, intra-basin baffles, and a theoretical detention time of 90 minutes.

$T_{10}/T = 0.5$ (see Table L-8)

$T_{10} = 0.5 \times 90$ minutes = 45 minutes

$CT_{calc} = 1.0$ mg/L x 45 minutes = 45 mg-min/L

Note- Required inactivation is 0.5 logs since this particular disinfection process follows a conventional water treatment plant.

From Table L-3, 5°C

At pH = 7.5.C = 1.0 mg/L and CT_{calc} = 45 mg-min/L, interpolate the log inactivation.

CT_{calc} of 45 mg-min/L falls between CTs of 30 (0.5 log)and 60 (1.0 log)mg-min/L. The corresponding log inactivation would be as follows:

0.5 + [(45-30)/60-30) X (1.0 - 0.5)] = 0.75 logs

Therefore, the log inactivation requirement of 0.5 logs has been satisfied.

Although the detention time is proportional to flow, the relationship generally is not linear. Therefore, tracer studies may be used to establish detention times for the range of flow rates experienced within each disinfectant section.

Ideally, tracer tests should be conducted at a minimum of four flow rates that span the entire range of flows for the section being tested. The flow rates should be separated by approximately equal intervals to span the range of operation, with one near average flow, two greater than average, and one less than average. The flows should also be selected so that the highest is at least 91 percent of the highest flow rate expected to ever occur in that section. Four data points will ensure a good definition of the section s hydraulic profile.

Systems can perform just one tracer test for each disinfectant residual at a flow rate of not less that 91 percent of the highest flow rate experienced in that section. If only one tracer test is performed, the detention time determined by the test may be used to provide a conservative estimate in CT calculations for that section for all flow rates less than or equal to the flow rate during the tracer test. Since T_{10} is inversely proportional to flow rate, the T_{10} at a flow rate other than that occurring during the tracer study can be determined by multiplying the T_{10} determined from the tracer study by the ratio of the tracer-study flow rate to the desired flow rate. That is:

$T_{10S} = T_{10T} \times O_T/O_S$

Where:

T_{10S} = T_{10} at system flow rate

T_{10T}= T_{10} at tracer flow rate

O_T = tracer study flow rate

O_S = system flow rate

When tracer studies are performed, several variables other than flow rate will affect the detention time, including varying water levels in tanks, seasonal fluctuations in flow, and differences in water temperature, which may cause thermal stratification. If these variables are significant, additional tracer studies to determine the appropriate T_{10} values may be warranted.

Two methods of tracer addition are commonly used in water treatment evaluations: the step-dose method and the slug-dose method. In general, tracer studies involve the application of a chemical to a system and tracking the effluent concentrations over time. The effluent concentration profile is evaluated to determine the detention time T_{10}.

Step-dose tracer studies are frequently employed in drinking water applications because the necessary chemical feed equipment is available and the resulting profile of normalized concentrations versus time is used directly to determine the detention time (T_{10}) required for calculating CT. The T_{10} value obtained from the studies is actually the time at which the effluent concentration of the tracer chemical is 10 percent of the added concentration.

The slug-dose method requires the addition of a large, initial dose of tracer to the incoming water. Samples are collected at the exit end of the unit for a period of time until the tracer passes through the unit. Disadvantages of this method include: (1) extremely concentrated solutions of chemicals are required; (2) intensive mixing is required to minimize potential density currents and to obtain uniform distribution; (3) the concentration and volume of the initial tracer dose must be calculated carefully to provide an adequate tracer profile; (4) the resulting profile of concentration versus time cannot be used directly to determine T_{10}; and (5) a mass balance on the treatment section is required to determine whether the tracer was completely recovered. One advantage of this method is that it may be applied where chemical feed equipment is not available at the desired point of application or where the equipment that is available does not have adequate capacity.

Disinfection Profile and Benchmark

1. A disinfection profile is prepared by calculating the log inactivation for each disinfection segment of the treatment plant, from initial point of disinfectant addition to the entrance to the distribution system. The log inactivations for each segment are summed to yield the total plant log inactivation.

2. The procedure for computing the log inactivation is as follows:

a. Collect data daily (plants serving 10,000 or more people), or weekly on the same calendar day (plants serving less than 10,000 people), at each disinfectant residual sampling point during peak hourly flow, for:

(1) Water temperature (^{o}C)

(2) Water pH (required for free chlorine calculation)

(3) Disinfectant residual concentration (“C,” in mg/L)

b. Calculate contact time (“T,” in minutes) for each disinfectant segment based on baffling factors or tracer studies.

c. Calculate CT_{actual} for each disinfection segment under actual operating conditions.

d. Determine the $CT_{required}$ for 3-log Giardia inactivation ($CT_{3\text{-log Giardia}}$) and/or 4-log virus ($CT_{4\text{-log virus}}$) inactivation from the CT Tables.

e. Calculate the log inactivation for Giardia and/or viruses for each segment using:

(1) Log Inactivation of Giardia = 3.0 * CT_{actual} /$CT_{3\text{-log Giardia}}$

(2) Log inactivation of viruses = 4.0 * CT_{actual} /$CT_{4\text{-log Giardia}}$

f. Sum the segment log inactivations to determine the plant log inactivation.

3. The disinfection profile is charted over the year and the benchmark is determined based on 12 VAC 5-590-500.

TABLE L-1

MAXIMUM LOG REMOVAL CREDITS ALLOWED FOR FILTRATION AND MINIMUM REQUIRED LEVELS OF INACTIVATION BY DISINFECTION

Minimum Required Disinfection				
Type of Filtration	Maximum Log Removal Credits		(Log Inactivations)	
	Giardia	Viruses	Giardia	Viruses
Conventional	2.5	2.0	0.5	2.0
Direct	2.0	1.0	1.0	3.0
Slow Sand	2.0	2.0	1.0	2.0
Diatomaceous Earth	2.0	1.0	1.0	3.0

NOTE - The sum of the log removals for filtration plus disinfection must equal 3.0 for Giardia and 4.0 for viruses.

TABLE L-2

CT VALUES FOR INACTIVATION OF GIARDIA CYSTS BY FREE CHLORINE AT 0.5 C OR LOWER

CHLORINE CONCENTRATION	LOG INACTIVATIONS						LOG INACTIVATIONS					
	pH ≤ 6						pH = 6.5					
(mg/L)	0.5	1.0	1.5	2.0	2.5	3.0	0.5	1.0	1.5	2.0	2.5	3.0
≤0.4	23	46	69	91	114	137	27	54	82	109	136	163
0.6	24	47	71	94	118	141	28	56	84	112	140	168
0.8	24	48	73	97	121	145	29	57	86	115	143	172
1.0	25	49	74	99	123	148	29	59	88	117	147	176
1.2	25	51	76	101	127	152	30	60	90	120	150	180
1.4	26	52	78	103	129	155	31	61	92	123	153	184
1.6	26	52	79	105	131	157	32	63	95	126	158	189
1.8	27	54	81	108	135	162	32	64	97	129	161	193
2.0	28	55	83	110	138	165	33	66	99	131	164	197
2.2	28	56	85	113	141	169	34	67	101	134	168	201
2.4	29	57	86	115	143	172	34	68	103	137	171	205
2.6	29	58	88	117	146	175	35	70	105	139	174	209
2.8	30	59	89	119	148	178	36	71	107	142	178	213

3.0	30	60	91	121	151	181	36	72	109	145	181	217
	pH = 7.0						pH = 7.5					
(mg/L)	0.5	1.0	1.5	2.0	2.5	3.0	0.5	1.0	1.5	2.0	2.5	3.0
≤0.4	33	65	98	130	163	195	40	79	119	158	198	237
0.6	33	67	100	133	167	200	40	80	120	159	199	239
0.8	34	68	103	137	171	205	41	82	123	164	205	246
1.0	35	70	105	140	175	210	42	84	127	169	211	253
1.2	36	72	108	143	179	215	43	86	130	173	216	259
1.4	37	74	111	147	184	221	44	89	133	177	222	266
1.6	38	75	113	151	188	226	46	91	137	182	228	273
1.8	39	77	116	154	193	231	47	93	140	186	233	279
2.0	39	79	118	157	197	236	48	95	143	191	238	286
2.2	40	81	121	161	202	242	50	99	149	198	248	297
2.4	41	82	124	165	206	247	50	99	149	199	248	298
2.6	42	84	126	168	210	252	51	101	152	203	253	304
2.8	43	86	129	171	214	257	52	103	155	207	258	310
3.0	44	87	131	174	218	261	53	105	158	211	263	316
	pH = 8.0						pH = 8.5					
(mg/L)	0.5	1.0	1.5	2.0	2.5	3.0	0.5	1.0	1.5	2.0	2.5	3.0
≤0.4	46	92	139	185	231	277	55	110	165	219	274	329
0.6	48	95	143	191	238	286	57	114	171	228	285	342
0.8	49	98	148	197	246	295	59	118	177	236	295	354
1.0	51	101	152	203	253	304	61	122	183	243	304	365
1.2	52	104	157	209	261	313	63	125	188	251	313	376
1.4	54	107	161	214	268	321	65	129	194	258	323	387
1.6	55	110	165	219	274	329	66	132	199	265	331	397
1.8	56	113	169	225	282	338	68	136	204	271	339	407
2.0	58	115	173	231	288	346	70	139	209	278	348	417
2.2	59	118	177	235	294	353	71	142	213	284	355	426
2.4	60	120	181	241	301	361	73	145	218	290	363	435
2.6	61	123	184	245	307	368	74	148	222	296	370	444
2.8	63	125	188	250	313	375	75	151	226	301	377	452
3.0	64	127	191	255	318	382	77	153	230	307	383	460
	pH = 9.0											
(mg/L)	0.5	1.0	1.5	2.0	2.5	3.0						
≤0.4	65	130	195	260	325	390						
0.6	68	136	204	271	339	407						
0.8	70	141	211	281	352	422						
1.0	73	146	219	291	364	437						

1.2	75	150	226	301	376	451
1.4	77	155	232	309	387	464
1.6	80	159	239	318	398	477
1.8	82	163	245	326	408	489
2.0	83	167	250	333	417	500
2.2	85	170	256	341	426	511
2.4	87	174	261	348	435	522
2.6	89	178	267	355	444	533
2.8	91	181	272	362	453	543
3.0	92	184	276	368	460	552

TABLE L-3												
CT VALUES FOR INACTIVATION OF GIARDIA CYSTS BY FREE CHLORINE AT 5 C												
CHLORINE CONCENTRATION	LOG INACTIVATIONS						LOG INACTIVATIONS					
	pH ≤ 6						pH = 6.5					
(mg/L)	0.5	1.0	1.5	2.0	2.5	3.0	0.5	1.0	1.5	2.0	2.5	3.0
≤0.4	16	32	49	65	81	97	20	39	59	78	98	117
0.6	17	33	50	67	83	100	20	40	60	80	100	120
0.8	17	34	52	69	86	103	20	41	61	81	102	122
1.0	18	35	53	70	88	105	21	42	63	83	104	125
1.2	18	36	54	71	89	107	21	42	64	85	106	127
1.4	18	36	55	73	91	109	22	43	65	87	108	130
1.6	19	37	56	74	93	111	22	44	66	88	110	132
1.8	19	38	57	76	95	114	23	45	68	90	113	135
2.0	19	39	58	77	97	116	23	46	69	92	115	138
2.2	20	39	59	79	98	118	23	47	70	93	117	140
2.4	20	40	60	80	100	120	24	48	72	95	119	143
2.6	20	41	61	81	102	122	24	49	73	97	122	146
2.8	21	41	62	83	103	124	25	49	74	99	123	148
3.0	21	42	63	84	105	126	25	50	76	101	126	151
	pH = 7.0						pH = 7.5					
(mg/L)	0.5	1.0	1.5	2.0	2.5	3.0	0.5	1.0	1.5	2.0	2.5	3.0
≤0.4	23	46	70	93	116	139	28	55	83	111	138	166
0.6	24	48	72	95	119	143	29	57	86	114	143	171
0.8	24	49	73	97	122	146	29	58	88	117	146	175
1.0	25	50	75	99	124	149	30	60	90	119	149	179
1.2	25	51	76	101	127	152	31	61	92	122	153	183
1.4	26	52	78	103	129	155	31	62	94	125	156	187
1.6	26	53	79	105	132	158	32	64	96	128	160	192

1.8	27	54	81	108	135	162	33	65	98	131	163	196
2.0	28	55	83	110	138	165	33	67	100	133	167	200
2.2	28	56	85	113	141	169	34	68	102	136	170	204
2.4	29	57	86	115	143	172	35	70	105	139	174	209
2.6	29	58	88	117	146	175	36	71	107	142	178	213
2.8	30	59	89	119	148	178	36	72	109	145	181	217
3.0	30	61	91	121	152	182	37	74	111	147	184	221
	pH = 7.0						pH = 8.5					
(mg/L)	0.5	1.0	1.5	2.0	2.5	3.0	0.5	1.0	1.5	2.0	2.5	3.0
≤0.4	33	66	99	132	165	198	39	79	118	157	197	236
0.6	34	68	102	136	170	204	41	81	122	163	203	244
0.8	35	70	105	140	175	210	42	84	126	168	210	252
1.0	36	72	108	144	180	216	43	87	130	173	217	260
1.2	37	74	111	147	184	221	45	89	134	178	223	267
1.4	38	76	114	151	189	227	46	91	137	183	228	274
1.6	39	77	116	155	193	232	47	94	141	187	234	281
1.8	40	79	119	159	198	238	48	96	144	191	239	287
2.0	41	81	122	162	203	243	49	98	147	196	245	294
2.2	41	83	124	165	207	248	50	100	150	200	250	300
2.4	42	84	127	169	211	253	51	102	153	204	255	306
2.6	43	86	129	172	215	258	52	104	156	208	260	312
2.8	44	88	132	175	219	263	53	106	159	212	265	318
3.0	45	89	134	179	223	268	54	108	162	216	270	324
	pH = 9.0											
(mg/L)	0.5	1.0	1.5	2.0	2.5	3.0						
≤0.4	47	93	140	186	233	279						
0.6	49	97	146	194	243	291						
0.8	50	100	151	201	251	301						
1.0	52	104	156	208	260	312						
1.2	53	107	160	213	267	320						
1.4	55	110	165	219	274	329						
1.6	56	112	169	225	281	337						
1.8	58	115	173	230	288	345						
2.0	59	118	177	235	294	353						
2.2	60	120	181	241	301	361						
2.4	61	123	184	245	307	368						
2.6	63	125	188	250	313	375						
2.8	64	127	191	255	318	382						
3.0	65	130	195	259	324	389						

TABLE L-4

CT VALUES FOR INACTIVATION OF GIARDIA CYSTS BY FREE CHLORINE AT 10 C

Appendix L - 10

CHLORINE CONCENTRATION	LOG INACTIVATIONS						LOG INACTIVATIONS					
	pH ≤ 6						pH = 6.5					
(mg/L)	0.5	1.0	1.5	2.0	2.5	3.0	0.5	1.0	1.5	2.0	2.5	3.0
≤0.4	12	24	37	49	61	73	15	29	44	59	73	88
0.6	13	25	38	50	63	75	15	30	45	60	75	90
0.8	13	26	39	52	65	78	15	31	46	61	77	92
1.0	13	26	40	53	66	79	16	31	47	63	78	94
1.2	13	27	40	53	67	80	16	32	48	63	79	95
1.4	14	27	41	55	68	82	16	33	49	65	82	98
1.6	14	28	42	55	69	83	17	33	50	66	83	99
1.8	14	29	43	57	72	86	17	34	51	67	84	101
2.0	15	29	44	58	73	87	17	35	52	69	87	104
2.2	15	30	45	59	74	89	18	35	53	70	88	105
2.4	15	30	45	60	75	90	18	36	54	71	89	107
2.6	15	31	46	61	77	92	18	37	55	73	92	110
2.8	16	31	47	62	78	93	19	37	56	74	93	110
3.0	16	32	48	63	79	95	19	38	57	75	94	113
	pH = 7.0						pH = 7.5					
(mg/L)	0.5	1.0	1.5	2.0	2.5	3.0	0.5	1.0	1.5	2.0	2.5	3.0
≤0.4	17	35	52	69	87	104	21	42	63	83	104	125
0.6	18	36	54	71	89	107	21	43	64	85	107	128
0.8	18	37	55	73	92	110	22	44	66	87	109	131
1.0	19	37	56	75	93	112	22	45	67	89	112	134
1.2	19	38	57	76	95	114	23	46	69	91	114	137
1.4	19	39	58	77	97	116	23	47	70	93	117	140
1.6	20	40	60	79	99	119	24	48	72	96	120	144
1.8	20	41	61	81	102	122	25	49	74	98	123	147
2.0	21	41	62	83	103	124	25	50	75	100	125	150
2.2	21	42	64	85	106	127	26	51	77	102	128	153
2.4	22	43	65	86	108	129	26	52	79	105	131	157
2.6	22	44	66	87	109	131	27	53	80	107	133	160
2.8	22	45	67	89	112	134	27	54	82	109	136	163
3.0	23	46	69	91	114	137	28	55	83	111	138	166
	pH = 8.0						pH = 8.5					
(mg/L)	0.5	1.0	1.5	2.0	2.5	3.0	0.5	1.0	1.5	2.0	2.5	3.0
≤0.4	25	50	75	99	124	149	30	59	89	118	148	177

0.6	26	51	77	102	128	153	31	61	92	122	153	183
0.8	26	53	79	105	132	158	32	63	95	126	158	189
1.0	27	54	81	108	135	162	33	65	98	130	163	195
1.2	28	55	83	111	138	166	33	67	100	133	167	200
1.4	28	57	85	113	142	170	34	69	103	137	172	206
1.6	29	58	87	116	145	174	35	70	106	141	176	211
1.8	30	60	90	119	149	179	36	72	108	143	179	215
2.0	30	61	91	121	152	182	37	74	111	147	184	221
2.2	31	62	93	124	155	186	38	75	113	150	188	225
2.4	32	63	95	127	158	190	38	77	115	153	192	230
2.6	32	65	97	129	162	194	39	78	117	156	195	234
2.8	33	66	99	131	164	197	40	80	120	159	199	239
3.0	34	67	101	134	168	201	41	81	122	162	203	243
	pH = 9.0											
(mg/L)	0.5	1.0	1.5	2.0	2.5	3.0						
≤0.4	35	70	105	139	174	209						
0.6	36	73	109	145	182	218						
0.8	38	75	113	151	188	226						
1.0	39	78	117	156	195	234						
1.2	40	80	120	160	200	240						
1.4	41	82	124	165	206	247						
1.6	42	84	127	169	211	253						
1.8	43	86	130	173	216	259						
2.0	44	88	133	177	221	265						
2.2	45	90	136	181	226	271						
2.4	46	92	138	184	230	276						
2.6	47	94	141	187	234	281						
2.8	48	96	144	191	239	287						
3.0	49	97	146	195	243	292						

TABLE L-5												
CT VALUES FOR INACTIVATION OF GIARDIA CYSTS BY FREE CHLORINE AT 15 C												
CHLORINE CONCENTRATION	LOG INACTIVATIONS						LOG INACTIVATIONS					
	pH ≤ 6						pH = 6.5					
(mg/L)	0.5	1.0	1.5	2.0	2.5	3.0	0.5	1.0	1.5	2.0	2.5	3.0
≤0.4	8	16	25	33	41	49	10	20	30	39	49	59
0.6	8	17	25	33	42	50	10	20	30	40	50	60
0.8	9	17	26	35	43	52	10	20	31	41	51	61

1.0	9	18	27	35	44	53	11	21	32	42	53	63
1.2	9	18	27	36	45	54	11	21	32	43	53	64
1.4	9	18	28	37	46	55	11	22	33	43	54	65
1.6	9	19	28	37	47	56	11	22	33	44	55	66
1.8	10	19	29	38	48	57	11	23	34	45	57	68
2.0	10	19	29	39	48	58	12	23	35	46	58	69
2.2	10	20	30	39	49	59	12	23	35	47	58	70
2.4	10	20	30	40	50	60	12	24	36	48	60	72
2.6	10	20	31	41	51	61	12	24	37	49	61	73
2.8	10	21	31	41	52	62	12	25	37	49	62	74
3.0	11	21	32	42	53	63	13	25	38	51	63	76
	pH = 7.0						pH = 7.5					
(mg/L)	0.5	1.0	1.5	2.0	2.5	3.0	0.5	1.0	1.5	2.0	2.5	3.0
≤0.4	12	23	35	47	58	70	14	28	42	55	69	83
0.6	12	24	36	48	60	72	14	29	43	57	72	86
0.8	12	24	37	49	61	73	15	29	44	59	73	88
1.0	13	25	38	50	63	75	15	30	45	60	75	90
1.2	13	25	38	51	63	76	15	31	46	61	77	92
1.4	13	26	39	52	65	78	16	31	47	63	78	94
1.6	13	26	40	53	66	79	16	32	48	64	80	96
1.8	14	27	41	54	68	81	16	33	49	65	82	98
2.0	14	28	42	55	69	83	17	33	50	67	83	100
2.2	14	28	43	57	71	85	17	34	51	68	85	102
2.4	14	29	43	57	72	86	18	35	53	70	88	105
2.6	15	29	44	59	73	88	18	36	54	71	89	107
2.8	15	30	45	59	74	89	18	36	55	73	91	109
3.0	15	30	46	61	76	91	19	37	56	74	93	111
	pH = 8.0						pH = 8.5					
(mg/L)	0.5	1.0	1.5	2.0	2.5	3.0	0.5	1.0	1.5	2.0	2.5	3.0
≤0.4	17	33	50	66	83	99	20	39	59	79	98	118
0.6	17	34	51	68	85	102	20	41	61	81	102	122
0.8	18	35	53	70	88	105	21	42	63	84	105	126
1.0	18	36	54	72	90	108	22	43	65	87	108	130
1.2	19	37	56	74	93	111	22	45	67	89	112	134
1.4	19	38	57	76	95	114	23	46	69	91	114	137
1.6	19	39	58	77	97	116	24	47	71	94	118	141
1.8	20	40	60	79	99	119	24	48	72	96	120	144
2.0	20	41	61	81	102	122	25	49	74	98	123	147
2.2	21	41	62	83	103	124	25	50	75	100	125	150

2.4	21	42	64	85	106	127	26	51	77	102	128	153
2.6	22	43	65	86	108	129	26	52	78	104	130	156
2.8	22	44	66	88	110	132	27	53	80	106	133	159
3.0	22	45	67	89	112	134	27	54	81	108	135	162
	pH = 9.0											
(mg/L)	0.5	1.0	1.5	2.0	2.5	3.0						
≤0.4	23	47	70	93	117	140						
0.6	24	49	73	97	122	146						
0.8	25	50	76	101	126	151						
1.0	26	52	78	104	130	156						
1.2	27	53	80	107	133	160						
1.4	28	55	83	110	138	165						
1.6	28	56	85	113	141	169						
1.8	29	58	87	115	144	173						
2.0	30	59	89	118	148	177						
2.2	30	60	91	121	151	181						
2.4	31	61	92	123	153	184						
2.6	31	63	94	125	157	188						
2.8	32	64	96	127	159	191						
3.0	33	65	98	130	163	195						

TABLE L-6												
CT VALUES FOR INACTIVATION OF GIARDIA CYSTS BY FREE CHLORINE AT 20 C												
CHLORINE CONCENTRATION	LOG INACTIVATIONS						LOG INACTIVATIONS					
	pH ≤ 6						pH = 6.5					
(mg/L)	0.5	1.0	1.5	2.0	2.5	3.0	0.5	1.0	1.5	2.0	2.5	3.0
≤0.4	6	12	18	24	30	36	7	15	22	29	37	44
0.6	6	13	19	25	32	38	8	15	23	30	38	45
0.8	7	13	20	26	33	39	8	15	23	31	38	46
1.0	7	13	20	26	33	39	8	16	24	31	39	47
1.2	7	13	20	27	33	40	8	16	24	32	40	48
1.4	7	14	21	27	34	41	8	16	25	33	41	49
1.6	7	14	21	28	35	42	8	17	25	33	42	50
1.8	7	14	22	29	36	43	9	17	26	34	43	51
2.0	7	15	22	29	37	44	9	17	26	35	43	52
2.2	7	15	22	29	37	44	9	18	27	35	44	53
2.4	8	15	23	30	38	45	9	18	27	36	45	54
2.6	8	15	23	31	38	46	9	18	28	37	46	55

2.8	8	16	24	31	39	47	9	19	28	37	47	56
3.0	8	16	24	31	39	47	10	19	29	38	48	57
	pH = 7.0						pH = 7.5					
(mg/L)	0.5	1.0	1.5	2.0	2.5	3.0	0.5	1.0	1.5	2.0	2.5	3.0
≤0.4	9	17	26	35	43	52	10	21	31	41	52	62
0.6	9	18	27	36	45	54	11	21	32	43	53	64
0.8	9	18	28	37	46	55	11	22	33	44	55	66
1.0	9	19	28	37	47	56	11	22	34	45	56	67
1.2	10	19	29	38	48	57	12	23	35	46	58	69
1.4	10	19	29	39	48	58	12	23	35	47	58	70
1.6	10	20	30	39	49	59	12	24	36	48	60	72
1.8	10	20	31	41	51	61	12	25	37	49	62	74
2.0	10	21	31	41	52	62	13	25	38	50	63	75
2.2	11	21	32	42	53	63	13	26	39	51	64	77
2.4	11	22	33	43	54	65	13	26	39	52	65	78
2.6	11	22	33	44	55	66	13	27	40	53	67	80
2.8	11	22	34	45	56	67	14	27	41	54	68	81
3.0	11	23	34	45	57	68	14	28	42	55	69	83
	pH = 8.0						pH = 8.5					
(mg/L)	0.5	1.0	1.5	2.0	2.5	3.0	0.5	1.0	1.5	2.0	2.5	3.0
≤0.4	12	25	37	49	62	74	15	30	45	59	74	89
0.6	13	26	39	51	64	77	15	31	46	61	77	92
0.8	13	26	40	53	66	79	16	32	48	63	79	95
1.0	14	27	41	54	68	81	16	33	49	65	82	98
1.2	14	28	42	55	69	83	17	33	50	67	83	100
1.4	14	28	43	57	71	85	17	34	52	69	86	103
1.6	15	29	44	58	73	87	18	35	53	70	88	105
1.8	15	30	45	59	74	89	18	36	54	72	90	108
2.0	15	30	46	61	76	91	18	37	55	73	92	110
2.2	16	31	47	62	78	93	19	38	57	75	94	113
2.4	16	32	48	63	79	95	19	38	58	77	96	115
2.6	16	32	49	65	81	97	20	39	59	78	98	117
2.8	17	33	50	66	83	99	20	40	60	79	99	119
3.0	17	34	51	67	84	101	20	41	61	81	102	122
	pH = 9.0											
(mg/L)	0.5	1.0	1.5	2.0	2.5	3.0						
≤0.4	18	35	53	70	88	105						
0.6	18	36	55	73	91	109						
0.8	19	38	57	75	94	113						

1.0	20	39	59	78	98	117
1.2	20	40	60	80	100	120
1.4	21	41	62	82	103	123
1.6	21	42	63	84	105	126
1.8	22	43	65	86	108	129
2.0	22	44	66	88	110	132
2.2	23	45	68	90	113	135
2.4	23	46	69	92	115	138
2.6	24	47	71	94	118	141
2.8	24	48	72	95	119	143
3.0	24	49	73	97	122	146

TABLE L-7												
CT VALUES FOR INACTIVATION OF GIARDIA CYSTS BY FREE CHLORINE												
CHLORINE CONCENTRATION	LOG INACTIVATIONS						LOG INACTIVATIONS					
	pH ≤ 6						pH = 6.5					
(mg/L)	0.5	1.0	1.5	2.0	2.5	3.0	0.5	1.0	1.5	2.0	2.5	3.0
≤0.4	4	8	12	16	20	24	5	10	15	19	24	29
0.6	4	8	13	17	21	25	5	10	15	20	25	30
0.8	4	9	13	17	22	26	5	10	16	21	26	31
1.0	4	9	13	17	22	26	5	10	16	21	26	31
1.2	5	9	14	18	23	27	5	11	16	21	27	32
1.4	5	9	14	18	23	27	6	11	17	22	28	33
1.6	5	9	14	19	23	28	6	11	17	22	28	33
1.8	5	10	15	19	24	29	6	11	17	23	28	34
2.0	5	10	15	19	24	29	6	12	18	23	29	35
2.2	5	10	15	20	25	30	6	12	18	23	29	35
2.4	5	10	15	20	25	30	6	12	18	24	30	36
2.6	5	10	16	21	26	31	6	12	19	25	31	37
2.8	5	10	16	21	26	31	6	12	19	25	31	37
3.0	5	11	16	21	27	32	6	13	19	25	32	38
	pH = 7.0						pH = 7.5					
(mg/L)	0.5	1.0	1.5	2.0	2.5	3.0	0.5	1.0	1.5	2.0	2.5	3.0
≤0.4	6	12	18	23	29	35	7	14	21	28	35	42
0.6	6	12	18	24	30	36	7	14	22	29	36	43
0.8	6	12	19	25	31	37	7	15	22	29	37	44
1.0	6	12	19	25	31	37	8	15	23	30	38	45
1.2	6	13	19	25	32	38	8	15	23	31	38	46

1.4	7	13	20	26	33	39	8	16	24	31	39	47
1.6	7	13	20	27	33	40	8	16	24	32	40	48
1.8	7	14	21	27	34	41	8	16	25	33	41	49
2.0	7	14	21	27	34	41	8	17	25	33	42	50
2.2	7	14	21	28	35	42	9	17	26	34	43	51
2.4	7	14	22	29	36	43	9	17	26	35	43	52
2.6	7	15	22	29	37	44	9	18	27	35	44	53
2.8	8	15	23	30	38	45	9	18	27	36	45	54
3.0	8	15	23	31	38	46	9	18	28	37	46	55
	pH = 8.0						pH = 8.5					
(mg/L)	0.5	1.0	1.5	2.0	2.5	3.0	0.5	1.0	1.5	2.0	2.5	3.0
≤0.4	8	17	25	33	42	50	10	20	30	39	49	59
0.6	9	17	26	34	43	51	10	20	31	41	51	61
0.8	9	18	27	35	44	53	11	21	32	42	53	63
1.0	9	18	27	36	45	54	11	22	33	43	54	65
1.2	9	18	28	37	46	55	11	22	34	45	56	67
1.4	10	19	29	38	48	57	12	23	35	46	58	69
1.6	10	19	29	39	48	58	12	23	35	47	58	70
1.8	10	20	30	40	50	60	12	24	36	48	60	72
2.0	10	20	31	41	51	61	12	25	37	49	62	74
2.2	10	21	31	41	52	62	13	25	38	50	63	75
2.4	11	21	32	42	53	63	13	26	39	51	64	77
2.6	11	22	33	43	54	65	13	26	39	52	65	78
2.8	11	22	33	44	55	66	13	27	40	53	67	80
3.0	11	22	34	45	56	67	14	27	41	54	68	81
	pH = 9.0											
(mg/L)	0.5	1.0	1.5	2.0	2.5	3.0						
≤0.4	12	23	35	47	58	70						
0.6	12	24	37	49	61	73						
0.8	13	25	38	50	63	75						
1.0	13	26	39	52	65	78						
1.2	13	26	40	53	67	80						
1.4	14	27	41	55	68	82						
1.6	14	28	42	56	70	84						
1.8	14	29	43	57	72	86						
2.0	15	29	44	59	73	88						
2.2	15	30	45	60	75	90						
2.4	15	31	46	61	77	92						
2.6	16	31	47	63	78	94						

2.8	16	32	48	64	80	96
3.0	16	32	49	65	81	97

TABLE L-8		
BAFFLING CLASSIFICATIONS		
Baffling Condition	T_{10}/T	Baffling Description
Unbaffled (mixed flow)	0.1	None, agitated basin, very low length to width ratio, high inlet and outlet flow velocities
Poor	0.3	Single or multiple unbaffled inlets and outlets, no intrabasin baffles
Average	0.5	Baffled inlet or outlet with some intrabasin baffles
Superior	0.7	Perforated inlet baffle, serpentine or perforated intrabasin baffles, outlet weir or perforated launders
Excellent	0.9	Serpentine baffling throughout basin, very high length to width ratio
Perfect	1.0[(1)]	Very high length to width ratio (pipeline flow), (plug perforated inlet, outlet, and intrabasin baffles flow)

[(1)] At perfect plug flow conditions, T_{10} is equal to T.

Table L-9. CT Values for Inactivation of Viruses by Free Chlorine, pH 6.0-9.0

Inactivation (log)	Temperature (°C)												
	0.5	1	2	3	4	5	6	7	8	9	10	11	12
2	6.0	5.8	5.3	4.9	4.4	4.0	3.8	3.6	3.4	3.2	3.0	2.8	2.6
3	9.0	8.7	8.0	7.3	6.7	6.0	5.6	5.2	4.8	4.4	4.0	3.8	3.6
4	12.0	11.6	10.7	9.8	8.9	8.0	7.6	7.2	6.8	6.4	6.0	5.6	5.2
Inactivation (log)	Temperature (°C)												
	13	14	15	16	17	18	19	20	21	22	23	24	25
2	2.4	2.2	2.0	1.8	1.6	1.4	1.2	1.0	1.0	1.0	1.0	1.0	1.0
3	3.4	3.2	3.0	2.8	2.6	2.4	2.2	2.0	1.8	1.6	1.4	1.2	1.0
4	4.8	4.4	4.0	3.8	3.6	3.4	3.2	3.0	2.8	2.6	2.4	2.2	2.0

Source: AWWA, 1991. Modified by linear interpolation between 5°C increments.

Table L-10. CT Values for Inactivation of Giardia Cysts by Chlorine Dioxide, pH 6.0-9.0

Inactivation (log)	Temperature (°C)												
	1	2	3	4	5	6	7	8	9	10	11	12	13
0.5	10.0	8.6	7.2	5.7	4.3	4.2	4.2	4.1	4.1	4.0	3.8	3.7	3.5
1	21.0	17.9	14.	11.	8.7	8.5	8.3	8.1	7.9	7.7	7.4	7.1	6.9

			9	8									
1.5	32.0	27.3	22.5	17.8	13.0	12.8	12.6	12.4	12.2	12.0	11.6	11.2	10.8
2	42.0	35.8	29.5	23.3	17.0	16.6	16.2	15.8	15.4	15.0	14.6	14.2	13.8
2.5	52.0	44.5	37.0	29.5	22.0	21.4	20.8	20.2	19.6	19.0	18.4	17.8	17.2
3	63.0	53.8	44.5	35.3	26.0	25.4	24.8	24.2	23.6	23.0	22.2	21.4	20.6
Inactivation (log)	Temperature (°C)												
	14	15	16	17	18	19	20	21	22	23	24	25	
0.5	3.4	3.2	3.1	2.9	2.8	2.6	2.5	2.4	2.3	2.2	2.1	2.0	
1	6.6	6.3	6.0	5.8	5.5	5.3	5.0	4.7	4.5	4.2	4.0	3.7	
1.5	10.4	10.0	9.5	9.0	8.5	8.0	7.5	7.1	6.7	6.3	5.9	5.5	
2	13.4	13.0	12.4	11.8	11.2	10.6	10.0	9.5	8.9	8.4	7.8	7.3	
2.5	16.6	16.0	15.4	14.8	14.2	13.6	13.0	12.2	11.4	10.6	9.8	9.0	
3	19.8	19.0	18.2	17.4	16.6	15.8	15.0	14.2	13.4	12.6	11.8	11.0	

Source: AWWA, 1991. Modified by linear interpolation between 5°C increments.

Table L-11. CT Values for Inactivation of Viruses by Chlorine Dioxide, pH 6.0-9.0

Inactivation (log)	Temperature (°C)												
	1	2	3	4	5	6	7	8	9	10	11	12	13
2	8.4	7.7	7.0	6.3	5.6	5.3	5.0	4.8	4.5	4.2	3.9	3.6	3.4
3	25.6	23.5	21.4	19.2	17.1	16.2	15.4	14.5	13.7	12.8	12.0	11.1	10.3
4	50.1	45.9	41.8	37.6	33.4	31.7	30.1	28.4	26.8	25.1	23.4	21.7	20.1
Inactivation (log)	Temperature (°C)												
	14	15	16	17	18	19	20	21	22	23	24	25	
2	3.1	2.8	2.7	2.5	2.4	2.2	2.1	2.0	1.8	1.7	1.5	1.4	
3	9.4	8.6	8.2	7.7	7.3	6.8	6.4	6.0	5.6	5.1	4.7	4.3	
4	18.4	16.7	15.9	15.0	14.2	13.3	12.5	11.7	10.9	10.0	9.2	8.4	

Source: AWWA, 1991. Modified by linear interpolation between 5°C increments.

Table L-12. CT Values for Inactivation of Giardia Cysts by Chloramine, pH 6.0-9.0

Inactivation (log)	Temperature (°C)												
	1	2	3	4	5	6	7	8	9	10	11	12	13

0.5	635	568	500	433	365	354	343	332	321	310	298	286	274
1	1,270	1,136	1,003	869	735	711	687	663	639	615	592	569	546
1.5	1,900	1,700	1,500	1,300	1,100	1,066	1,032	998	964	930	894	858	822
2	2,535	2,269	2,003	1,736	1,470	1,422	1,374	1,326	1,278	1,230	1,184	1,138	1,092
2.5	3,170	2,835	2,500	2,165	1,830	1,772	1,714	1,656	1,598	1,540	1,482	1,424	1,366
3	3,800	3,400	3,000	2,600	2,200	2,130	2,060	1,990	1,920	1,850	1,780	1,710	1,640
Inactivation (log)	Temperature (°C)												
	14	15	16	17	18	19	20	21	22	23	24	25	
0.5	262	250	237	224	211	198	185	173	161	149	137	125	
1	523	500	474	448	422	396	370	346	322	298	274	250	
1.5	786	750	710	670	630	590	550	515	480	445	410	375	
2	1,046	1,000	947	894	841	788	735	688	641	594	547	500	
2.5	1,308	1,250	1,183	1,116	1,049	982	915	857	799	741	683	625	
3	1,570	1,500	1,420	1,340	1,260	1,180	1,100	1,030	960	890	820	750	

Source: AWWA, 1991. Modified by linear interpolation between 5°C increments.

Table L-13. CT Values for Inactivation of Viruses by Chloramine

Inactivation (log)	Temperature (°C)												
	1	2	3	4	5	6	7	8	9	10	11	12	13
2	1,243	1,147	1,050	954	857	814	771	729	686	643	600	557	514
3	2,063	1,903	1,743	1,583	1,423	1,352	1,281	1,209	1,138	1,067	996	925	854
4	2,883	2,659	2,436	2,212	1,988	1,889	1,789	1,690	1,590	1,491	1,392	1,292	1,193
Inactivation (log)	Temperature (°C)												
	14	15	16	17	18	19	20	21	22	23	24	25	
2	471	428	407	385	364	342	321	300	278	257	235	214	
3	783	712	676	641	605	570	534	498	463	427	392	356	
4	1,093	994	944	895	845	796	746	696	646	597	547	497	

Source: AWWA, 1991. Modified by linear interpolation between 5°C increments.

Table L-14. CT Values for Inactivation of Giardia Cysts by Ozone

	Temperature (°C)

Inactivation (log)	Temperature (°C)												
	1	2	3	4	5	6	7	8	9	10	11	12	13
0.5	0.48	0.44	0.40	0.36	0.32	0.30	0.28	0.27	0.25	0.23	0.22	0.20	0.19
1.0	0.97	0.89	0.80	0.72	0.63	0.60	0.57	0.54	0.51	0.48	0.45	0.42	0.38
1.5	1.50	1.36	1.23	1.09	0.95	0.90	0.86	0.81	0.77	0.72	0.67	0.62	0.58
2.0	1.90	1.75	1.60	1.45	1.30	1.23	1.16	1.09	1.02	0.95	0.89	0.82	0.76
2.5	2.40	2.20	2.00	1.80	1.60	1.52	1.44	1.36	1.28	1.20	1.12	1.04	0.95
3.0	2.90	2.65	2.40	2.15	1.90	1.81	1.71	1.62	1.52	1.43	1.33	1.24	1.14

Inactivation (log)	Temperature (°C)												
	14	15	16	17	18	19	20	21	22	23	24	25	
0.5	0.17	0.16	0.15	0.14	0.14	0.13	0.12	0.11	0.10	0.10	0.09	0.08	
1.0	0.35	0.32	0.30	0.29	0.27	0.26	0.24	0.22	0.21	0.19	0.18	0.16	
1.5	0.53	0.48	0.46	0.43	0.41	0.38	0.36	0.34	0.31	0.29	0.26	0.24	
2.0	0.69	0.63	0.60	0.57	0.54	0.51	0.48	0.45	0.42	0.38	0.35	0.32	
2.5	0.87	0.79	0.75	0.71	0.68	0.64	0.60	0.56	0.52	0.48	0.44	0.40	
3.0	1.05	0.95	0.90	0.86	0.81	0.77	0.72	0.67	0.62	0.58	0.53	0.48	

Source: AWWA, 1991. Modified by linear interpolation between 5°C increments.

Table L-15. CT Values for Inactivation of Viruses by Ozone

Inactivation (log)	Temperature (°C)												
	1	2	3	4	5	6	7	8	9	10	11	12	13
2	0.90	0.83	0.75	0.68	0.60	0.58	0.56	0.54	0.52	0.50	0.46	0.42	0.38
3	1.40	1.28	1.15	1.03	0.90	0.88	0.86	0.84	0.82	0.80	0.74	0.68	0.62
4	1.80	1.65	1.50	1.35	1.20	1.16	1.12	1.08	1.04	1.00	0.92	0.84	0.76

Inactivation (log)	Temperature (°C)												
	14	15	16	17	18	19	20	21	22	23	24	25	
2	0.34	0.30	0.29	0.28	0.27	0.26	0.25	0.23	0.21	0.19	0.17	0.15	
3	0.56	0.50	0.48	0.46	0.44	0.42	0.40	0.37	0.34	0.31	0.28	0.25	
4	0.68	0.60	0.58	0.56	0.54	0.52	0.50	0.46	0.42	0.38	0.34	0.30	

Source: AWWA, 1991. Modified by linear interpolation between 5°C increments.

APPENDIX M. LEAD AND COPPER

LEAD AND COPPER

Table M1
Monitoring Frequency for Initial Sampling Requirements

PWS Size	Monitoring Type	Location	No. Samples	Frequency
Large PWSs >100,000	Lead and Copper	Taps	100	6 months
	Water Quality Parameters	Distribution System	25	Twice per 6 months
	Source Water	Entry Points		
	Lead and Copper		1	6 months*
	Water Quality Parameters		1	Twice per 6 months
50,001-100,000	Lead and Copper	Taps	60	6 months
	Water Quality Parameters	Distribution System	10	Twice per 6 months
	Source Water	Entry Points		
	Lead and Copper		1	6 months*
	Water Quality Parameters		1	Twice per 6 months
Medium PWSs 10,001-50,000	Lead and Copper	Taps	60	6 months
	If ALs Exceeded			
	Water Quality Parameters	Distribution System	10	Twice per 6 months
	Source Water	Entry Points		
	Lead and Copper		1	6 months
	Water Quality Parameters		1	Twice per 6 months
3,301-10,000	Lead and Copper	Taps	40	6 months
	If ALs Exceeded			
	Water Quality Parameters	Distribution System	3	Twice per 6 months
	Source Water	Entry Points		
	Lead and Copper		1	6 months
	Water Quality		1	Twice per 6

	Parameters			months
Small PWSs 501-3,300	Lead and Copper* If ALs Exceeded Water Quality Parameters Source Water Lead and Copper Water Quality Parameters	Taps Distribution System Entry Points	20 2 1 1	6 months Twice per 6 months 6 months Twice per 6 months
101-500	Lead and Copper If ALs Exceeded Water Quality Parameters Source Water Lead and Copper Water Quality Parameters	Taps Distribution System Entry Points	10 1 1 1	6 months Twice per 6 months 6 months Twice per 6 months
≤100	Lead and Copper* If ALs Exceeded Water Quality Parameters Source Water Lead and Copper Water Quality Parameters	Taps Distribution System Entry Points	5 1 1 1	6 months Twice per 6 months 6 months Twice per 6 months
Nontransient Noncommunity Water Systems	Lead and Copper Water Quality Parameters	Taps Distribution System	No more than one per building per monitoring period	

*If system wants to attempt to demonstrate optimization based on difference between source water levels and 90% tap level. Otherwise, one sample per entry point required if an AL is exceeded.

LEAD AND COPPER

Table M2
Monitoring Frequency for Follow-up and Routine Sampling Requirements

PWS Size	Monitoring Type	Location	No. Samples	Frequency
Large PWSs >100,000	Lead and Copper Water Quality Parameters	Taps Distribution System	100 25	6 months Twice per 6 months

	Source Water	Entry Points		
	Lead and Copper		1	6 months*
	Water Quality Parameters		1	Biweekly
50,001-100,000	Lead and Copper	Taps	60	6 months
	Water Quality Parameters	Distribution System	10	Twice per 6 months
	Source Water	Entry Points		
	Lead and Copper		1	6 months*
	Water Quality Parameters		1	Biweekly
Medium PWSs				
10,001-50,000	Lead and Copper	Taps	60	6 months
	Water Quality Parameters	Distribution System	10	Twice per 6 months
	Source Water	Entry Points		
	Lead and Copper		1	6 months*
	Water Quality Parameters		1	Biweekly
3,301-10,000	Lead and Copper	Taps	40	6 months
	Water Quality Parameters	Distribution System	3	Twice per 6 months
	Source Water	Entry Points		
	Lead and Copper		1	6 months*
	Water Quality Parameters		1	Biweekly
Small PWSs				
501-3,300	Lead and Copper	Taps	20	6 months
	Water Quality Parameters	Distribution System	2	Twice per 6 months
	Source Water	Entry Points		
	Lead and Copper		1	6 months*
	Water Quality Parameters		1	Biweekly
101-500	Lead and Copper*	Taps	10	6 months
	Water Quality Parameters	Distribution System	1	Twice per 6 months
	Source Water	Entry Points		
	Lead and Copper		1	6 months
	Water Quality		1	Biweekly

≤100	Parameters Lead and Copper* Water Quality Parameters Source Water Lead and Copper Water Quality Parameters	Taps Distribution System Entry Points	5 1 1 1	6 months Twice per 6 months 6 months* Biweekly
Nontransient Noncommunity Water Systems	Lead and Copper Water Quality Parameters	Taps Distribution System	No more than one per building per monitoring period	

*If source water treatment installed; otherwise, see reduced monitoring requirements.

LEAD AND COPPER

Table M3
Monitoring Frequency for Reduced Sampling Requirements

PWS Size	Monitoring Type	Reduced Monitoring	Ultimate Reduced Monitoring
Large PWSs >100,000	Lead and Copper	50 per year	50 per 3 years
	Water Quality Parameters	10 twice per 6 months	10 twice per year
	Points of Entry Lead and Copper		
	Groundwater Supply	1 per 3 years	1 per 9 years
	Surface Water Supply	Annually	1 per 9 years
	Water Quality Parameters	Biweekly	Biweekly
50,001-100,000	Lead and Copper	30 per year	30 per 3 years
	Water Quality Parameters	7 twice per 6 months	7 twice per year
	Points of Entry Lead and Copper		
	Groundwater Supply	1 per 3 years	1 per 9 years
	Surface Water Supply	Annually	1 per 9 years
	Water Quality Parameters	Biweekly	Biweekly
Medium PWSs 10,001-50,00	Lead and Copper	30 per year	30 per 3 years

0			
	Water Quality Parameters	7 twice per 6 months	7 twice per year
	Points of Entry Lead and Copper		
	Groundwater Supply	1 per 3 years	1 per 9 years
	Surface Water Supply	Annually	1 per 9 years
	Water Quality Parameters	Biweekly	Biweekly
3,301-10,000	Lead and Copper	20 per year	20 per 3 years
	Water Quality Parameters	3 twice per 6 months	3 twice per year
	Points of Entry Lead and Copper		
	Groundwater Supply	1 per 3 years	1 per 9 years
	Surface Water Supply	Annually	1 per 9 years
	Water Quality Parameters	Biweekly	Biweekly
Small PWSs			
501-3,300	Lead and Copper	10 per year	10 per 3 years
	Water Quality Parameters	2 twice per 6 months	2 twice per year
	Points of Entry Lead and Copper		
	Groundwater Supply	1 per 3 years	1 per 9 years
	Surface Water Supply	Annually	1 per 9 years
	Water Quality Parameters	Biweekly	Biweekly
101-500	Lead and Copper	5 per year	5 per 3 years
	Water Quality Parameters	1 twice per 6 months	1 twice per year
	Points of Entry Lead and Copper		
	Groundwater Supply	1 per 3 years	1 per 9 years
	Surface Water Supply	Annually	1 per 9 years
	Water Quality Parameters	Biweekly	Biweekly
≤100	Lead and Copper	5 per year	5 per 3 years
	Water Quality Parameters	1 twice per 6 months	1 twice per year

	Points of Entry Lead and Copper		
	Groundwater Supply	1 per 3 years	1 per 9 years
	Surface Water Supply	Annually	1 per 9 years
	Water Quality Parameters	Biweekly	Biweekly

Table M4

SUMMARY OF MONITORING REQUIREMENTS FOR WATER QUALITY PARAMETERS[1]

Monitoring Period	Parameters[2]	Location	Frequency
Initial Monitoring	pH, alkalinity, orthophosphate or silica,[3] calcium, conductivity, temperature	Taps and at entry point(s) to distribution system	Every 6 months
After Installation of Corrosion Control	pH, alkalinity, orthophosphate or silica,[3] calcium[4]	Taps	Every 6 months
	pH, alkalinity dosage rate and concentration (if alkalinity adjusted as part of corrosion control), inhibitor dosage rate and inhibitor residual[5]	Entry point(s) to distribution system[6]	No less frequently than every two weeks.
After State Specifies Parameter Values For Optimal Corrosion Control	pH, alkalinity, orthophosphate or silica,[3] calcium[4]	Taps	Every 6 months
	pH, alkalinity dosage rate and concentration (if alkalinity adjusted as part of corrosion control), inhibitor dosage rate and inhibitor residual[5]	Entry point(s) to distribution system	No less frequently than every two weeks.
Reduced Monitoring	pH, alkalinity, orthophosphate or silica,[3] calcium[4]	Taps	Every six months, annually[7] or every 3 years[8] at a reduced number of sites
	pH, alkalinity dosage rate and concentration (if alkalinity adjusted as part of corrosion control), inhibitor dosage rate and inhibitor residual[5]	Entry point(s) to distribution system	No less frequently than every two weeks.

[1]Table is for illustrative purposes; consult the text of this section for precise regulatory requirements.

[2]Small and medium-size systems have to monitor for water quality parameters only during monitoring periods in which the system exceeds the lead or copper action level.

[3]Orthophosphate must be measured only when an inhibitor containing a phosphate compound is used. Silica must be measured only when an inhibitor containing silicate compound is used.

[4]Calcium must be measured only when calcium carbonate stabilization is used as part of corrosion control.

[5]Inhibitor dosage rates and inhibitor residual concentrations (orthophosphate or silica) must be measured only when an inhibitor is used.

[6]Groundwater systems may limit monitoring to representative locations throughout the system.

[7]Waterworks may reduce frequency of monitoring for water quality parameters at the tap from every six months to annually if they maintain the minimum values or range of values for water quality parameters reflecting optimal corrosion control treatment during three consecutive years of monitoring.

[8]Waterworks may further reduce the frequency of monitoring for water quality parameters at the tap from annually to once every three years if they have maintained the minimum values or range of values for water quality parameters reflecting optimal corrosion control treatment during three consecutive years of annual monitoring. Waterworks may accelerate the triennial monitoring for water quality parameters at the tap if they have maintained 90th percentile lead levels less than or equal to 0.005 mg/L, 90th percentile copper levels less than or equal to 0.65 mg/L, and the range of water quality parameters designated by the Commissioner under 12 VAC 5-590-420 C 1 f as representing optimal corrosion control during two consecutive six-month periods.

APPENDIX N. INORGANIC COMPOUNDS AND ORGANIC CHEMICALS

TABLE I	
INORGANIC COMPOUNDS	
Contaminant	BAT(s)
Antimony	2, 7
Asbestos	2, 3, 8
Barium	5, 6, 7, 9
Beryllium	1, 2, 5, 6, 7
Cadmium	2, 5, 6, 7
Chromium	2, 5, 6[b], 7
Cyanide	5, 7, 13
Fluoride	1, 7, 9
Mercury	2[a], 4, 6[a], 7[a]
Nickel	5, 6, 7
Nitrate	5, 7, 9
Nitrite	5, 7
Selenium	1, 2[c], 6, 7, 9
Thallium	1, 5

Key to Best Available Technologies/Treatment Techniques

1. Activated Alumina
2. Coagulation/Filtration (except for waterworks serving less than 500 service connections)
3. Direct or Diatomite Filtration
4. Granular Activated Carbon
5. Ion Exchange
6. Lime Softening (except for waterworks serving less than 500 service connections)
7. Reverse Osmosis
8. Corrosion Control
9. Electrodialysis/Electrodialysis Reversing

10. Chlorine
11. Ultraviolet
12. Oxidation/Filtration
13. Alkaline Chlorination pH≥8.5

NOTES ON BAT DESIGNATIONS

a. BAT only if influent mercury concentrations are less than or equal to 10 µg/l
b. BAT for Chromium III only
c. BAT for Selenium IV only

TABLE II	
ORGANIC CHEMICALS	
Contaminant	BAT(s)
Acrylamide	3
Alachlor	1
Aldicarb	1
Aldicarb sulfoxide	1
Aldicarb sulfone	1
Atrazine	1
Benzene	1, 2
Carbofuran	1
Carbon tetrachloride	1, 2
Chlordane	1
2,4-D	1
Dibromochloropropane (DBCP)	1, 2
o-Dichlorobenzene	1, 2
p-Dichlorobenzene	1, 2
1,2-Dichloroethane	1, 2
1,1-Dichloroethylene	1, 2
cis-1,2-Dichloroethylene	1, 2
trans-1,2-Dichloroethylene	1, 2

1,2-Dichloropropane	1, 2
Epichlorohydrin	3
Ethylene dibromide (EDB)	1, 2
Ethylbenzene	1, 2
Heptachlor	1
Heptachlor epoxide	1
Lindane	1
Methoxychlor	1
Monochlorobenzene	1, 2
PCBs	1
Pentachlorophenol	1
Styrene	1, 2
2,4,5-TP (Silvex)	1
Tetrachloroethylene	1, 2
1,1,1-Trichloroethane	1, 2
Trichloroethylene	1, 2
Toluene	1, 2
Toxaphene	1
Vinyl chloride	2
Xylenes (total)	1, 2
Benzo(a)pyrene	1
Dalapon	1
Dichloromethane	2
Di(2-ethylhexyl)adipate	1, 2
Di(2-ethylhexyl)phthalate	1
Dinoseb	1
Diquat	1
Endothall	1
Endrin	1

Glyphosate	4
Hexachlorobenzene	1
Hexachloropentadiene	1, 2
Oxamyl (Vydate)	1
Picloram	1
Simazine	1
1,2,4-Trichlorobenzene	1, 2
1,1,2-Trichloroethane	1, 2
2,3,7,8-TCDD (Dioxin)	1

Key to Best Available Technologies/Treatment Techniques

1. Granular Activated Carbon
2. Packed Tower Aeration
3. Polymer Addition Practices
4. Oxidation (chlorination, with the exception of water having cyanide (as free cyanide) exceeding 0.2 mg/l, or ozonation)

APPENDIX O. REGULATED CONTAMINANTS FOR CONSUMER CONFIDENCE REPORTS AND PUBLIC NOTIFICATION.

Key

AL = Action Level
MCL = Maximum Contaminant Level
MCLG = Maximum Contaminant Level Goal
MFL = million fibers per liter
mrem/year = milirems per year (a measure of radiation absorbed by the body)
NTU = Nephelometric Turbidity Units
pCi/l = picocuries per liter (a measure of radioactivity)
ppb = parts per billion, or micrograms per liter (µg/l)
ppm = parts per million, or milligrams per liter (mg/l)
ppq = parts per quadrillion, or picograms per liter
ppt = parts per trillion, or nanograms per liter
TT = Treatment Technique

Contaminant (units)	traditional MCL in mg/l	to convert for CCR, multiply by	MCL in CCR units	MCLG	Major Sources in Drinking Water	Health Effects Language
Microbiological Contaminants						
(1) Total Coliform Bacteria	MCL: (systems that collect 40 or more samples per month) 5% of monthly samples are positive; (systems that collect fewer than 40 samples per month) 1 positive monthly sample			0	Naturally present in the environment	Coliforms are bacteria that are naturally present in the environment and are used as an indicator that other, potentially-harmful, bacteria may be present. Coliforms were found in more samples than allowed and this was a warning of potential problems

(2) Fecal coliform and E. coli	MCL: a routine sample and a repeat sample are total coliform positive, and one is also fecal coliform of E. coli positive	0	Human and animal fecal waste	Fecal coliforms and E. coli are bacteria whose presence indicates that the water may be contaminated with human or animal wastes. Microbes in these wastes can cause short-term effects, such as diarrhea, cramps, nausea, headaches, or other symptoms. They may pose a special health risk for infants, young children, some of the elderly, and people with severely-compromised immune systems.

(3) Turbidity	TT	-	TT	n/a	Soil runoff	Turbidity has no health effects. However, turbidity can interfere with disinfection and provide a medium for microbial growth. Turbidity may indicate the presence of disease-causing organisms. These organisms include bacteria, viruses, and parasites that can cause symptoms such as nausea, cramps, diarrhea and associated headaches.
(4) Giardia lamblia, viruses, Hetrotrophic plate count, Legionella, Cryptosporidium[1]	TT[5]	-	n/a	0	n/a	Inadequately treated water may contain disease-causing organisms. These organisms include bacteria, viruses, and parasites which can cause symptoms such as nausea, cramps, diarrhea, and associated headaches.

Radioactive Contaminants						
(5) Beta/photon emitters (mrem/yr)	4 mrem/yr	-	4	0	Decay of natural and man-made deposits	Certain minerals are radioactive and may emit forms of radiation known as photons and beta radiation. Some people who drink water containing beta and photon emitters in excess of the MCL over many years may have an increased risk of getting cancer.
(6) Alpha emitters (pCi/L)	15 pCi/L	-	15	0	Erosion of natural deposits	Certain minerals are radioactive and may emit a form of radiation known as alpha radiation. Some people who drink water containing alpha emitters in excess of the MCL over many years may have an increased risk of getting cancer.
(7) Combined radium (pCi/L)	5 pCi/L	-	5	0	Erosion of natural deposits	Some people who drink water containing radium-226 or radium-228 in excess of the MCL over many years may have an increased risk of getting cancer.

(8) Uranium (ppb)	30 µg/l	-	30	0	Erosion of natural deposits	Some people who drink water containing uranium in excess of the MCL over many years may have an increased risk of getting cancer and kidney toxicity.
Inorganic Contaminants						
(9) Antimony (ppb)	.006	1000	6	6	Discharge from petroleum refineries; fire retardants; ceramics; electronics; solder	Some people who drink water containing antimony well in excess of the MCL over many years could experience increases in blood cholesterol and decreases in blood sugar.
(10) Arsenic (ppb)	.05	1000	50	n/a	Erosion of natural deposits; Runoff from orchards; Runoff from glass and electronics production wastes	Some people who drink water containing arsenic in excess of the MCL over many years could experience skin damage or problems with their circulatory system, and may have an increased risk of getting cancer.
	0.01[2]		10[2]	0[2]		

(11) Asbestos (MFL)	7 MFL	-	7	7	Decay of asbestos cement water mains; Erosion of natural deposits	Some people who drink water containing asbestos in excess of the MCL over many years may have an increased risk of developing benign intestinal polyps.
(12) Barium (ppm)	2	-	2	2	Discharge of drilling wastes; Discharge from metal refineries; Erosion of natural deposits	Some people who drink water containing barium in excess of the MCL over many years could experience an increase in their blood pressure.
(13) Beryllium (ppb)	.004	1000	4	4	Discharge from metal refineries and coal-burning factories; Discharge from electrical, aerospace, and defense industries	Some people who drink water containing beryllium well in excess of the MCL over many years could develop intestinal lesions.
(14) Cadmium (ppb)	.005	1000	5	5	Corrosion of galvanized pipes; Erosion of natural deposits; Discharge from metal refineries; Run-off from waste batteries and paints	Some people who drink water containing cadmium in excess of the MCL over many years could experience kidney damage.

(15) Chromium (ppb)	.1	1000	100	100	Discharge from steel and pulp mills; Erosion of natural deposits	Some people who drink water containing chromium well in excess of the MCL over many years could experience allergic dermatitis.
(16) Copper (ppm)	AL=1.3	-	AL=1.3	1.3	Corrosion of household plumbing systems; Erosion of natural deposits	Copper is an essential nutrient, but some people who drink water containing copper in excess of the action level over a relatively short amount of time could experience gastrointestinal distress. Some people who drink water containing copper in excess of the action level over many years could suffer liver or kidney damage. People with Wilson's Disease should consult their personal doctor.

(17) Cyanide (ppb)	.2	1000	200	200	Discharge from steel/metal factories; Discharge from plastic and fertilizer factories	Some people who drink water containing cyanide well in excess of the MCL over many years could experience nerve damage or problems with their thyroid.
(18) Fluoride (ppm)	4	-	4	4	Erosion of natural deposits; Water additive which promotes strong teeth; Discharge from fertilizer and aluminum factories	Some people who drink water containing fluoride in excess of the MCL over many years could get bone disease, including pain and tenderness of the bones. Fluoride in drinking water at half the MCL or more may cause mottling of children's teeth, usually in children less than nine years old. Mottling, also known as dental fluorosis, may include brown staining and/or pitting of the teeth, and occurs only in developing teeth before they erupt from the gums.

(19) Lead (ppb)	AL=.015	1000	AL=15	0	Corrosion of household plumbing systems; Erosion of natural deposits	Infants and children who drink water containing lead in excess of the action level could experience delays in their physical or mental development. Children could show slight deficits in attention span and learning abilities. Adults who drink this water over many years could develop kidney problems or high blood pressure.
(20) Mercury [inorganic] (ppb)	.002	1000	2	2	Erosion of natural deposits; Discharge from refineries and factories; Runoff from landfills; Runoff from cropland	Some people who drink water containing inorganic mercury well in excess of the MCL over many years could experience kidney damage.

(21) Nitrate (ppm)	10	-	10	10	Runoff from fertilizer use; Leaching from septic tanks, sewage; Erosion of natural deposits	Infants below the age of six months who drink water containing nitrate in excess of the MCL could become seriously ill and, if untreated, may die. Symptoms include shortness of breath and blue baby syndrome.
(22) Nitrite (ppm)	1	-	1	1	Runoff from fertilizer use; Leaching from septic tanks, sewage; Erosion of natural deposits	Infants below the age of six months who drink water containing nitrite in excess of the MCL could become seriously ill and, if untreated, may die. Symptoms include shortness of breath and blue baby syndrome.
(23) Total Nitrate and Nitrite	10	-	n/a	10	n/a	Infants below the age of six months who drink water containing nitrate and nitrite in excess of the MCL could become seriously ill and, if untreated, may die. Symptoms include shortness of breath and blue baby syndrome.

(24) Selenium (ppb)	.05	1000	50	50	Discharge from petroleum and metal refineries; Erosion of natural deposits; Discharge from mines	Selenium is an essential nutrient. However, some people who drink water containing selenium in excess of the MCL over many years could experience hair or fingernail losses, numbness in fingers or toes, or problems with their circulation.
(25) Thallium (ppb)	.002	1000	2	0.5	Leaching from ore-processing sites; Discharge from electronics, glass, and drug factories	Some people who drink water containing thallium in excess of the MCL over many years could experience hair loss, changes in their blood, or problems with their kidneys, intestines, or liver.
Synthetic Organic Contaminants including Pesticides and Herbicides						
(26) 2,4-D (ppb)	.07	1000	70	70	Runoff from herbicides used on row crops	Some people who drink water containing the weed killer 2,4-D well in excess of the MCL over many years could experience problems with their kidneys, liver, or adrenal glands.

(27) 2,4,5-TP [Silvex] (ppb)	.05	1000	50	50	Residue of banned herbicide	Some people who drink water containing silvex in excess of the MCL over many years could experience liver problems.
(28) Acrylamide	TT	-	TT	0	Added to water during sewage/waste water treatment	Some people who drink water containing high levels of acrylamide over a long period of time could have problems with their nervous system or blood, and may have an increased risk of getting cancer.
(29) Alachlor (ppb)	.002	1000	2	0	Runoff from herbicide used on row crops	Some people who drink water containing alachlor in excess of the MCL over many years could have problems with their eyes, liver, kidneys, or spleen, or experience anemia, and may have an increased risk of getting cancer.

(30) Atrazine (ppb)	.003	1000	3	3	Runoff from herbicide used on row crops	Some people who drink water containing the atrazine well in excess of the MCL over many years could experience problems with their cardiovascular system or reproductive difficulties.
(31) Benzo(a)pyrene[PAH]	.0002	1,000,000	200	0	Leaching from linings of water storage tanks and distribution lines	Some people who drink water containing benzo(a)pyrene in excess of the MCL over many years could experience reproductive difficulties and may have an increased risk of getting cancer.
(32) Carbofuran (ppb)	.04	1000	40	40	Leaching of soil fumigant used on rice and alfalfa	Some people who drink water containing carbofuran in excess of the MCL over many years could experience problems with their blood, or nervous or reproductive systems.

(33) Chlordane (ppb)	.002	1000	2	0	Residue of banned termiticide	Some people who drink water containing chlordane in excess of the MCL over many years could experience problems with their liver or nervous system, and may have an increased risk of getting cancer.
(34) Dalapon (ppb)	.2	1000	200	200	Runoff from herbicide used on rights of way	Some people who drink water containing dalapon well in excess of the MCL over many years could experience minor kidney changes.
(35) Di(2-ethylhexyl) adipate (ppb)	.4	1000	400	400	Discharge from chemical factories	Some people who drink water containing di(2-ethyhexyl)adipate well in excess of the MCL over many years could experience toxic effects, such as weight loss, liver enlargement or possible reproductive difficulties.

(36) Di(2-ethylhexyl)phthalate (ppb)	.006	1000	6	0	Discharge from rubber and chemical factories	Some people who drink water containing di(2-ethylhexyl)phthalate in excess of the MCL over many years may have problems with their liver, or experience reproductive difficulties, and may have an increased risk of getting cancer.
(37) Dibromochloropropane (ppt)	.0002	1,000,000	200	0	Runoff/leaching from soil fumigant used on soybeans, cotton, pineapples, and orchards	Some people who drink water containing DBCP well in excess of the MCL over many years could experience reproductive problems and may have an increased risk of getting cancer.
(38) Dinoseb (ppb)	.007	1000	7	7	Runoff from herbicide used on soybeans and vegetables	Some people who drink water containing dinoseb well in excess of the MCL over many years could experience reproductive difficulties.

(39) Diquat (ppb)	.02	1000	20	20	Runoff from herbicide use	Some people who drink water containing diquat in excess of the MCL over many years could get cataracts.
(40) Dioxin [2,3,7,8-TCDD] (ppq)	.00000003	1,000,000,000	30	0	Emissions from waste incineration and other combustion; Discharge from chemical factories	Some people who drink water containing dioxin in excess of the MCL over many years could experience reproductive difficulties and may have an increased risk of getting cancer.
(41) Endothall (ppb)	.1	1000	100	100	Runoff from herbicide use	Some people who drink water containing endothall in excess of the MCL over many years could experience problems with their stomach or intestines.
(42) Endrin (ppb)	.002	1000	2	2	Runoff of banned insecticide	Some people who drink water containing endrin in excess of the MCL over many years could experience liver problems.

(43) Epichlorohydrin	TT	-	TT	0	Discharge from industrial chemical factories; An impurity of some water treatment chemicals	Some people who drink water containing high levels of epichlorohydrin over a long period of time could experience stomach problems, and may have an increased risk of getting cancer.
(44) Ethylene dibromide (ppt)	.00005	1,000,000	50	0	Discharge from petroleum refineries	Some people who drink water containing ethylene dibromide in excess of the MCL over many years could experience problems with their liver, stomach, reproductive system, or kidneys, and may have an increased risk of getting cancer.
(45) Glyphosate (ppb)	.7	1000	700	700	Runoff from herbicide use	Some people who drink water containing glyphosate in excess of the MCL over many years could experience problems with their kidneys or reproductive difficulties.

(46) Heptachlor (ppt)	.0004	1,000,000	400	0	Residue of banned pesticide	Some people who drink water containing heptachlor in excess of the MCL over many years could experience liver damage and may have an increased risk of getting cancer.
(47) Heptachlor epoxide (ppt)	.0002	1,000,000	200	0	Breakdown of heptachlor	Some people who drink water containing heptachlor epoxide in excess of the MCL over many years could experience liver damage, and may have an increased risk of getting cancer.
(48) Hexachlorobenzene (ppb)	.001	1000	1	0	Discharge from metal refineries and agricultural chemical factories	Some people who drink water containing hexachlorobenzene in excess of the MCL over many years could experience problems with their liver or kidneys or adverse reproductive effects, and may have an increased risk of getting cancer.

(49) Hexachlorocyclopentadiene (ppb)	.05	1000	50	50	Discharge from chemical factories	Some people who drink water containing hexachlorocyclopentadiene well in excess of the MCL over many years could experience problems with their stomach or kidneys.
(50) Lindane (ppt)	.0002	1,000,000	200	200	Runoff/leaching from insecticide used on cattle, lumber, gardens	Some people who drink water containing lindane in excess of the MCL over many years could experience problems with their kidneys or liver.
(51) Methoxychlor (ppb)	.04	1000	40	40	Runoff/leaching from insecticide used on fruits, vegetables, alfalfa, livestock	Some people who drink water containing methoxychlor in excess of the MCL over many years could experience reproductive difficulties.
(52) Oxamyl [Vydate] (ppb)	.2	1000	200	200	Runoff/leaching from insecticide used on apples, potatoes and tomatoes	Some people who drink water containing ethylene oxamyl in excess of the MCL over many years could experience slight nervous system effects.

(53) PCBs [Polychlorinated biphenyls] (ppt)	.0005	1,000,000	500	0	Runoff from landfills; Discharge of waste chemicals	Some people who drink water containing PCBs in excess of the MCL over many years could experience changes in their skin, problems with their thymus gland, immune deficiencies, or reproductive or nervous system difficulties, and may have an increased risk of getting cancer.
(54) Pentachlorophenol (ppb)	.001	1000	1	0	Discharge from wood preserving factories	Some people who drink water containing pentachlorophenol in excess of the MCL over many years could experience problems with their liver or kidneys, and may have an increased risk of getting cancer.
(55) Picloram (ppb)	.5	1000	500	500	Herbicide runoff	Some people who drink water containing picloram in excess of the MCL over many years could experience problems with their liver.

(56) Simazine (ppb)	.004	1000	4	4	Herbicide runoff	Some people who drink water containing simazine in excess of the MCL over many years could experience problems with their blood.
(57) Toxaphene (ppb)	.003	1000	3	0	Runoff/leaching from insecticide used on cotton and cattle	Some people who drink water containing toxaphene in excess of the MCL over many years could experience problems with their thyroid, kidneys, or liver and may have an increased risk of getting cancer.
Volatile Organic Contaminants						
(58) Benzene (ppb)	.005	1000	5	0	Discharge from factories; Leaching from gas storage tanks and landfills	Some people who drink water containing benzene in excess of the MCL over many years could experience anemia or a decrease in blood platelets, and may have an increased risk of getting cancer.

(59) Carbon tetrachloride (ppb)	.005	1000	5	0	Discharge from chemical plants and other industrial activities	Some people who drink water containing carbon tetrachloride in excess of the MCL over many years could experience problems with their liver and may have an increased risk of getting cancer.
(60) Chlorobenzene (ppb)	.1	1000	100	100	Discharge from chemical and agricultural chemical factories	Some people who drink water containing chlorobenzene in excess of the MCL over many years could experience problems with their liver or kidneys.
(61) o-Dichlorobenzene (ppb)	.6	1000	600	600	Discharge from industrial chemical factories	Some people who drink water containing o-dichlorobenzene well in excess of the MCL over many years could experience problems with their liver, kidneys, or spleen, or changes in their blood.

(62) p-Dichlorobenzene (ppb)	.075	1000	75	75	Discharge from industrial chemical factories	Some people who drink water containing p-dichlorobenzene in excess of the MCL over many years could experience anemia, damage to their liver, kidneys, or circulatory systems.
(63) 1,2-Dichloroethane (ppb)	.005	1000	5	0	Discharge from industrial chemical factories	Some people who drink water containing 1,2-dichloroethane in excess of the MCL over many years may have an increased risk of getting cancer.
(64) 1,1-Dichloroethylene (ppb)	.007	1000	7	7	Discharge from industrial chemical factories	Some people who drink water containing 1,1-dichloroethylene in excess of the MCL over many years could experience problems with their liver.
(65) cis-1,2-Dichloroethylene (ppb)	.07	1000	70	70	Discharge from industrial chemical factories	Some people who drink water containing cis-1,2-dichloroethylene in excess of the MCL over many years could experience problems with their liver.

(66) trans-1,2-Dichloroethylene (ppb)	.1	1000	100	100	Discharge from industrial chemical factories	Some people who drink water containing trans-1,2-dichloroethylene well in excess of the MCL over many years could experience problems with their liver.
(67) Dichloromethane (ppb)	.005	1000	5	0	Discharge from pharmaceutical and chemical factories	Some people who drink water containing dichloromethane in excess of the MCL over many years could have liver problems and may have an increased risk of getting cancer.
(68) 1,2-Dichloropropane (ppb)	.005	1000	5	0	Discharge from industrial chemical factories	Some people who drink water containing 1,2-dichloropropane in excess of the MCL over many years may have an increased risk of getting cancer.

(69) Ethylbenzene (ppb)	.7	1000	700	700	Discharge from petroleum refineries	Some people who drink water containing ethylbenzene well in excess of the MCL over many years could experience problems with their liver or kidneys.
(70) Styrene (ppb)	.1	1000	100	100	Discharge from rubber and plastic factories; Leaching from landfills	Some people who drink water containing styrene well in excess of the MCL over many years could experience problems with their liver, kidneys, or circulatory system.
(71) Tetrachloroethylene (ppb)	.005	1000	5	0	Discharge from factories and dry cleaners	Some people who drink water containing tetrachloroethylene in excess of the MCL over many years could have problems with their liver, and may have an increased risk of getting cancer.

(72) 1,2,4-Trichlorobenzene (ppb)	.07	1000	70	70	Discharge from textile-finishing factories	Some people who drink water containing 1,2,4-trichlorobenzene well in excess of the MCL over many years could experience changes in their adrenal glands.
(73) 1,1,1,-Trichloroethane (ppb)	.2	1000	200	200	Discharge from metal degreasing sites and other factories	Some people who drink water containing 1,1,1-trichloroethane in excess of the MCL over many years could experience problems with their liver, nervous system, or circulatory system.
(74) 1,1,2-Trichloroethane (ppb)	.005	1000	5	3	Discharge from industrial chemical factories	Some people who drink water containing 1,1,2-trichloroethane well in excess of the MCL over many years could have problems with their liver, kidneys, or immune systems.

(75) Trichloroethylene (ppb)	.005	1000	5	0	Discharge from metal degreasing sites and other factories	Some people who drink water containing trichloroethylene in excess of the MCL over many years could experience problems with their liver and may have an increased risk of getting cancer.
(76) Toluene (ppm)	1	-	1	1	Discharge from petroleum factories	Some people who drink water containing toluene well in excess of the MCL over many years could have problems with their nervous system, kidneys, or liver.
(77) Vinyl Chloride (ppb)	.002	1000	2	0	Leaching from PVC piping; Discharge from plastic factories	Some people who drink water containing vinyl chloride in excess of the MCL over many years may have an increased risk of getting cancer.
(78) Xylenes (ppm)	10	-	10	10	Discharge from petroleum factories; Discharge from chemical factories	Some people who drink water containing xylenes in excess of the MCL over many years could experience damage to their nervous system.
Disinfection By-Products, Precursors, and Residuals						

(79) TTHMs [total trihalomethanes] (ppb)	.10 .08[3]	1000	100 80[3]	n/a	By-product of drinking water disinfection	Some people who drink water containing trihalomethanes in excess of the MCL over many years could experience problems with their liver, kidneys, or central nervous systems, and may have an increased risk of getting cancer.
(80) Haloacetic acids (HAA) (ppb)	.060	1000	60	n/a	By-product of drinking water disinfection	Some people who drink water containing haloacetic acids in excess of the MCL over many years may have an increased risk of getting cancer.
(81) Bromate (ppb)	.010	1000	10	0	By-product of drinking water disinfection	Some people who drink water containing bromate in excess of the MCL over many years may have an increased risk of getting cancer.

(82) Chloramines (ppm)	MRDL=4	-	MRDL=4	MRDLG =4	Water additive used to control microbes	Some people who use water containing chloramines well in excess of the MRDL could experience irritating effects to their eyes and nose. Some people who drink water containing chloramines well in excess of the MRDL could experience stomach discomfort or anemia.
(83) Chlorine (ppb)	MRDL=4	-	MRDL=4	MRDLG =4	Water additive used to control microbes	Some people who use water containing chlorine well in excess of the MRDL could experience irritating effects to their eyes and nose. Some people who drink water containing chlorine well in excess of the MRDL could experience stomach discomfort.

(84) Chlorine dioxide (ppb)[4]	MRDL=0.8	1000	MRDL=800	MRDLG=800	Water additive used to control microbes	Some infants and young children who drink water containing chlorine dioxide in excess of the MRDL could experience nervous system effects. Similar effects may occur in fetuses of pregnant women who drink water containing chlorine dioxide in excess of the MRDL. Some people may experience anemia.
(84a) Chlorine dioxide, where any two consecutive daily samples taken at the entrance to the distribution system are above the MRDL.[1]	MRDL=0.8			MRDLG=0.8		The chlorine dioxide violations reported today are the result of exceedances at the treatment facility only, not within the distribution system which delivers water to consumers. Continued compliance with chlorine dioxide levels within the distribution system minimizes the potential risk of these violations to consumers.

(84b) Chlorine dioxide, where one or more distribution system samples are above the MRDL.[1]	MRDL=0.8			MRDLG=0.8		The chlorine dioxide violations reported today include exceedances of the EPA standard within the distribution system which delivers water to consumers. Violations of the chlorine dioxide standard within the distribution system may harm human health based on short-term exposures. Certain groups, including fetuses, infants, and young children, may be especially susceptible to nervous system effects from excessive chlorine dioxide exposure.

(85) Chlorite (ppm)	1	-	1	0.8	By-product of drinking water disinfection	Some infants and young children who drink water containing chlorite in excess of the MCL could experience nervous system effects. Similar effects may occur in fetuses of pregnant women who drink water containing chlorite in excess of the MCL. Some people may experience anemia.

(86) Total organic carbon (ppm)	TT	-	TT	n/a	Naturally present in the environment	Total organic carbon (TOC) has no health effects. However, total organic carbon provides a medium for the formation of disinfection byproducts. These byproducts include trihalomethanes (THMs) and haloacetic acids (HAAs). Drinking water containing these byproducts in excess of the MCL may lead to adverse health effects, liver or kidney problems, or nervous systems effects, and may lead to an increased risk of getting cancer.

[1]This information is for public notification purposes only.

[2]These arsenic values are effective January 23, 2006. Until then, the MCL is 0.05 mg/l and there is no MCLG.

[3]Compliance with this total trihalomethanes MCL is required beginning December 16, 2001, for systems serving 10,000 or more persons and beginning December 16, 2003, for systems serving fewer than 10,000 persons and systems using only groundwater not under the direct influence of surface water.

[4]This information is for Consumer Confidence Report purposes only.

[5]Violations of the treatment technique requirements for filtration and disinfection that involve turbidity exceedances may use the health effects language for turbidity instead.

APPENDIX P.

Best available technologies (BATs) for radionuclides. The commissioner identifies as indicated in the following table the best technology available for achieving compliance with the maximum contaminant levels for combined radium-226 and radium-228, uranium, gross alpha particle activity, and beta particle and photon radioactivity.

Table I.
BAT for Combined Radium-226 and Radium-228, Uranium, Gross Alpha Particle Activity, and Beta Particle and Photon Radioactivity.

Contaminant	BAT
1. Combined radium-226 and radium-228.	1. Ion exchange, reverse osmosis, lime softening.
2. Uranium.	2. Ion exchange, reverse osmosis, lime softening, coagulation/ filtration.
3. Gross alpha particle activity (excluding Radon and Uranium).	3. Reverse osmosis.
4. Beta particle and photon radioactivity.	4. Ion exchange, reverse osmosis.

Small systems compliance technologies list for radionuclides.

Table II.
List of Small Systems Compliance Technologies for Radionuclides and Limitations to Use.

Unit technologies	Limitations (see footnotes)[1]	Operator Skill Level required[2]	Raw water quality range and considerations.[2]
1. Ion exchange (IE).	(a)	Intermediate.	All ground waters.
2. Point of use (POU[3]) IE.	(b)	Basic.	All ground waters.
3. Reverse osmosis (RO).	(c)	Advanced.	Surface waters usually require pre-filtration.
4. POU[3] RO.	(b)	Basic.	Surface waters usually require pre-filtration.
5. Lime softening.	(d)	Advanced.	All waters.
6. Green sand filtration.	(e)	Basic.	All waters.
7. Co-precipitation with Barium sulfate.	(f)	Intermediate to Advanced.	Ground waters with suitable water quality.
8. Electrodialysis/Electrodialysis Reversal.	..	Basic to Intermediate.	All ground waters.

9. Pre-formed hydrous Manganese oxide.	(g)	Intermediate.	All ground waters.
10. Activated alumina.	(a), (h)	Advanced.	All ground waters; competing anion concentrations may affect regeneration frequency.
11. Enhanced coagulation/ filtration.	(i)	Advanced.	Can treat a wide range of water qualities.

[1]Limitations Footnotes: Technologies for Radionuclides:

a. The regeneration solution contains high concentrations of the contaminant ions. Disposal options should be carefully considered before choosing this technology.

b. When POU devices are used for compliance, programs for long-term operation, maintenance, and monitoring must be provided by water utility to ensure proper performance.

c. Reject water disposal options should be carefully considered before choosing this technology. See other RO limitations described in the SWTR Compliance Technologies Table.

d. The combination of variable source water quality and the complexity of the water chemistry involved may make this technology too complex for small surface water systems.

e. Removal efficiencies can vary depending on water quality.

f. This technology may be very limited in application to small systems. Since the process requires static mixing, detention basins, and filtration, it is most applicable to systems with sufficiently high sulfate levels that already have a suitable filtration treatment train in place.

g. This technology is most applicable to small systems that already have filtration in place.

h. Handling of chemicals required during regeneration and pH adjustment may be too difficult for small systems without an adequately trained operator.

i. Assumes modification to a coagulation/filtration process already in place.

[2]National Research Council (NRC). Safe Water from Every Tap: Improving Water Service to Small Communities. National Academy Press. Washington, D.C. 1997.

[3]A POU, or ``point-of-use'' technology is a treatment device installed at a single tap used for the purpose of reducing contaminants in drinking water at that one tap. POU devices are typically installed at the kitchen tap. See the April 21, 2000, NODA for more

details.

Table III.

Compliance Technologies by System Size Category for Radionuclide NPDWR's.

Contaminant	Compliance technologies[1] for system size categories (population served)		
	25 – 500	501 – 3,300	3,300 – 10,000
1. Combined radium-226 and radium-228.	1, 2, 3, 4, 5, 6, 7, 8, 9.	1, 2, 3, 4, 5, 6, 7, 8, 9.	1, 2, 3, 4, 5, 6, 7, 8, 9.
2. Gross alpha particle activity.	3,4.	3,4.	3,4.
3. Beta particle activity and photon activity.	1, 2, 3, 4.	1, 2, 3, 4.	1, 2, 3, 4.
4. Uranium.	1, 2, 4, 10, 11.	1, 2, 3, 4, 5, 10, 11.	1, 2, 3, 4, 5, 10, 11.

Note: [1] Numbers correspond to those technologies found listed in Table II.

DOCUMENTS INCORPORATED BY REFERENCE

Methods for the Determination of Metals in Environmental Samples, June 1991, United States Environmental Protection Agency.

Methods for the Determination of Metals in Environmental Samples -- Supplement I, May 1994, United States Environmental Protection Agency.

Methods for the Determination of Inorganic Substances in Environmental Samples, August 1993, United States Environmental Protection Agency.

Methods for the Determination of Organic Compounds in Drinking Water, July 1991, United States Environmental Protection Agency.

Methods for the Determination of Organic Compounds in Drinking Water -- Supplement I, July 1990, United States Environmental Protection Agency.

Methods for the Determination of Organic Compounds in Drinking Water -- Supplement II, August 1992, United States Environmental Protection Agency.

Technical Notes on Drinking Water Methods, October 1994, United States Environmental Protection Agency.

"Maximum Permissible Body Burdens and Maximum Permissible Concentration of Radionuclides in Air or Water for Occupational Exposure," National Bureau of Standards Handbook 69.

Standard Methods for the Examination of Water and Wastewater, 18th edition, American Public Health Association, American Waterworks Association, and Water Pollution Control Federation, 1992.

Methods for the Determination of Metals in Environmental Samples (including supplement I), USEPA May 1994.

Methods for the Determination of Organic Compounds in Drinking Water (including supplement I and II), USEPA, October 1994.

Technical Notes on Drinking Water Methods, USEPA, October 1994.

ANSI/NSF Standard for Drinking Water Treatment System Components, ANSI/NSF 61, American National Standard Institute, November, 1994.

AWWA Standard for American National Standard for Cement-Mortar Lining for Ductile-Iron Pipe and Fittings for Water, C-104, American Waterworks Association.

AWWA Standard for American National Standard for Polyethylene Encasement for Ductile-Iron Pipe and Fittings for Water, C-105, American Waterworks Association.

AWWA Standard for American National Standard for Ductile-Iron and Gray-Iron Fittings 3 Inch Through 48 Inch for Water, C-110, American Waterworks Association.

AWWA Standard for American National Standard for Rubber-Gasket Joints for

Ductile-Iron Pressure Pipe and Fittings, C-111, American Waterworks Association.

AWWA Standard for American National Standard for Flanged Ductile-Iron Pipe with Threaded Flanges, C-115, American Waterworks Association.

AWWA Standard for American National Standard for the Thickness Design of Ductile-Iron Pipe, C-150, American Waterworks Association.

AWWA Standard for American National Standard for Ductile-Iron Pipe, Centrifugally Cast, for Water or Other Liquids, C-151, American Waterworks Association.

AWWA Standard for American National Standard for Ductile-Iron Pipe, Compact Fittings, 3 Inch Through 16 Inch, for Water and Other Liquids, C-153, American Waterworks Association.

AWWA Standard for Steel Water Pipe, 6 Inch and Larger, C-200, American Waterworks Association.

AWWA Standard for Coal-Tar Protective Coatings and Linings for Steel Water Pipelines- Enamel and Tape-Hot Applied, C-203, American Waterworks Association.

AWWA Standard for Cement-Mortar Protective Lining and Coating for Steel Water Pipe-4 Inch and Larger-Shop Applied, C-205, American Waterworks Association.

AWWA Standard for Field Welding of Steel Water Pipe, C-206, American Waterworks Association.

AWWA Standard for Steel Pipe Flanges for Waterworks Service-4 Inch and Larger-Shop Applied, C-207, American Waterworks Association.

AWWA Standard for Dimensions for Fabricated Steel Water Pipe Fittings, C-208, American Waterworks Association.

AWWA Standards for Cold-Applied Coatings for the Exterior of Special Sections, Connections, and Fittings for Steel Water Pipelines, C-209, American Waterworks Association.

AWWA Standard for Liquid-Epoxy Coating Systems for the Interior and Exterior of Steel Water Pipelines, C-210, American Waterworks Association.

AWWA Standard for Fusion-Bonded Epoxy Coating for the Interior and Exterior of Steel Water Pipelines, C-213, American Waterworks Association.

AWWA Standards for Tape Coating Systems for the Exterior of Steel Water Pipelines, C-214, American Waterworks Association.

AWWA Standard for Extruded Polyolefin Coatings for the Exterior of Steel Water Pipelines, C-215, American Waterworks Association.

AWWA Standard for Cross-Linked Polyolefin Coatings for the Exterior of Special Sections, Connections, and Fittings for Buried Steel Water Pipelines, C-216, American Waterworks Association.

AWWA Standard for Cold-Applied Petrolatum Tape and Petroleum Wax Tape Coatings

for the Exterior of Special Sections, Connections, and Fittings for Buried Steel Water Pipelines, C-217, American Waterworks Association.

AWWA Standard for Coating the Exterior of Aboveground Steel Water Pipelines and Fittings, C-218, American Waterworks Association.

AWWA Standard for Bolted, Sleeve-Type Couplings for Plain-End Pipe, C-219, American Waterworks Association.

AWWA Standard for Stainless Steel Pipe, 4 Inch and Larger, C-220, American Waterworks Association.

AWWA Standard for Reinforced Concrete Pressure Pipe, Steel-Cylinder Type, for Water and Other Liquids, C-300, American Waterworks Association.

AWWA Standard for Prestressed Concrete Pressure Pipe, Steel-Cylinder Type, for Water and Other Liquids, C-301, American Waterworks Association.

AWWA Standard for Reinforced Concrete Pressure Pipe, Noncylinder Type, for Water and Other Liquids, C-302, American Waterworks Association.

AWWA Standard for Reinforced Concrete Pressure Pipe, Noncylinder Type, Pretensioned, for Water and Other Liquids, C-303, American Waterworks Association.

AWWA Standard for Design of Prestressed Concrete Cylinder Pipe, C-304, American Waterworks Association.

AWWA Standard for the Selection of Asbestos-Cement Transmission and Feeder Main Pipe, C-403, American Waterworks Association.

AWWA Standard for Cement-Mortar Lining of Water Pipelines-4 Inch (1000 mm) and Larger-In Place, C-602, American Waterworks Association.

AWWA Standard for Underground Service Line Valves and Fittings, C-800, American Waterworks Association.

AWWA Standard for Polyvinyl Chloride Pressure Pipe, 4 Inch Through 12 Inch for Water Distribution, C-900, American Waterworks Association.

AWWA Standard for Polybutylene Pressure Pipe and Tubings, 1/2 Inch Through 3 Inch, for Water Service, C-902, American Waterworks Association.

AWWA Standard for Polyethylene Pressure Pipe and Fittings, 4 Inch Through 63 Inch, for Water Distribution, C-906, American Waterworks Association.

AWWA Standard for Polyethylene Pressure Pipe and Tubing, 1/2 Inch Through 3 Inch, for Water Service, C-901, American Waterworks Association.

AWWA Standard for Polyvinyl Chloride Water Transmission Pipe, Nominal Diameters 14 Inch Through 36 Inch, C-905, American Waterworks Association.

AWWA Standard for Polyvinyl Chloride Pressure Fittings, 4 Inch Through 8 Inch, C-907, American Waterworks Association.

AWWA Standard for Fiberglass Pressure Pipe, C-950. American Waterworks Association.

AWWA Standard for Asbestos-Cement Pressure Pipe, 4 Inch Through 16 Inch, for Water Distribution Systems, C-400, American Waterworks Association.

AWWA Standard for Selection of Asbestos-Cement Pressure Pipe, 4 Inch Through 16 Inch, for Water Distribution Systems, C-401, American Waterworks Association.

AWWA Standard for Asbestos-Cement Transmission Pipe, 18 Inch Through 42 Inch, for Potable Water and Other Liquids, C-402, American Waterworks Association.

AWWA Standard for Installation of Ductile-Iron Pipe and Their Appurtenances, C-600, American Waterworks Association.

AWWA Standard for Installation of Asbestos-Cement Pressure Pipe, C-603, American Waterworks Association.

AWWA Standard for Grooved and Shouldered Joints, C-606, American Waterworks Association.

AWWA Standard for Disinfecting Water Mains, C-651, American Waterworks Association.

Control of Communicable Diseases in Man, 15 edition, American Public Health Association, 1990.