[redacted]

VA-001-D

7-OUTLET EQUAL FLOW DISTRIBUTION BOX

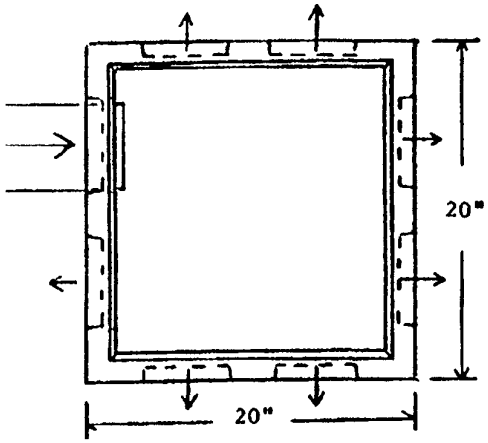

Manufactured by:

[redacted]

1-800-659-7815

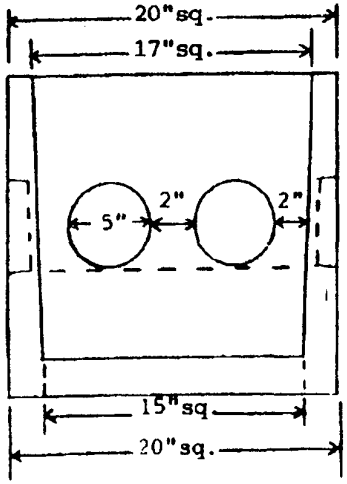

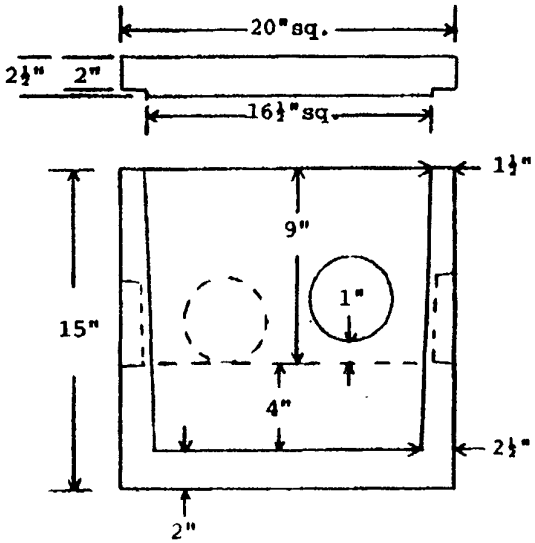

VA-002-D

7-OUTLET EQUAL FLOW DISTRIBUTION BOX

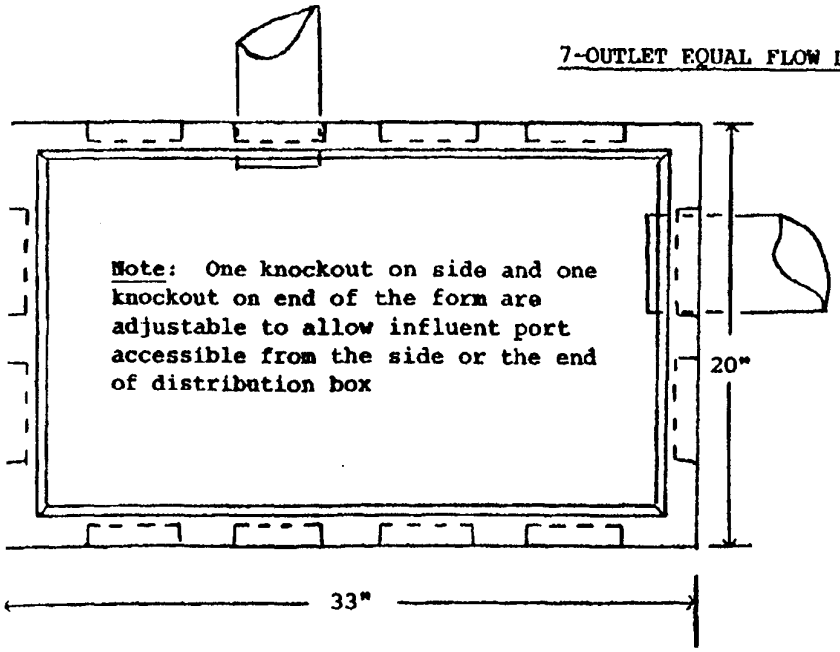

Manufactured by:

Bethlehem Manufacturing Company, Inc.

Route 16 Box 1648

Hickory, NC 28601

1-800-659-7815

Latt T. Moretz
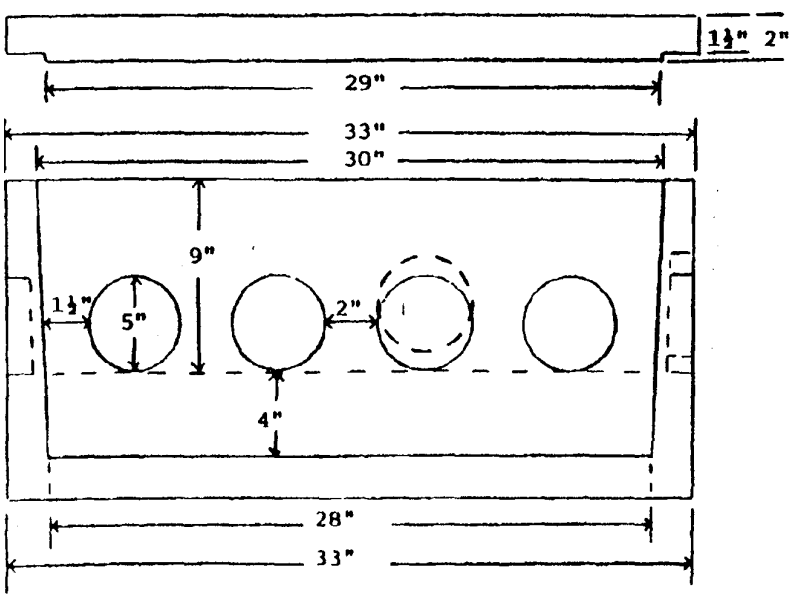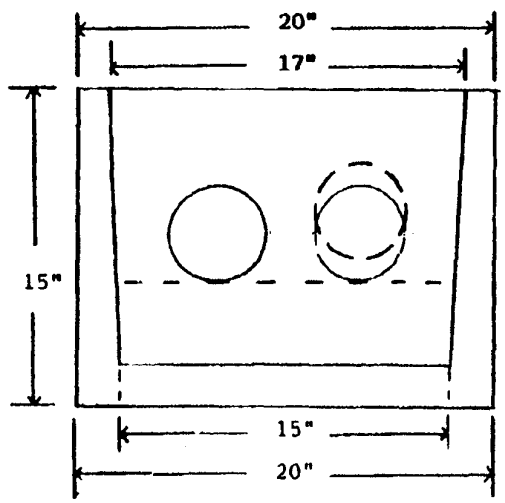
[redacted]