REVISIONS				
ZONE	REV	DESCRIPTION	DATE	APPROVED

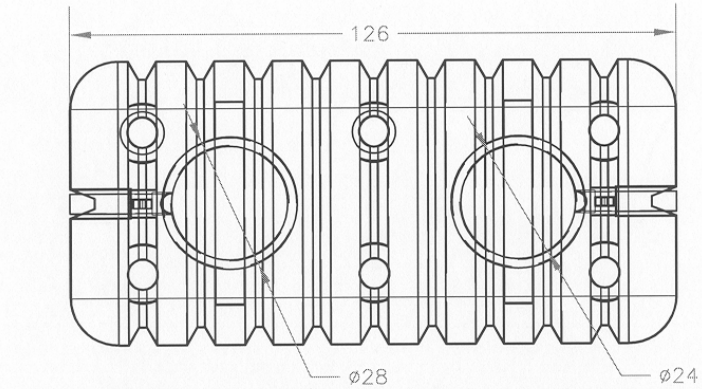

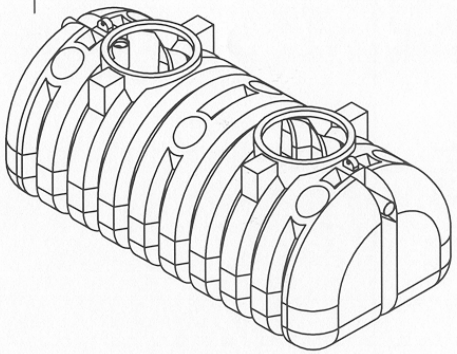

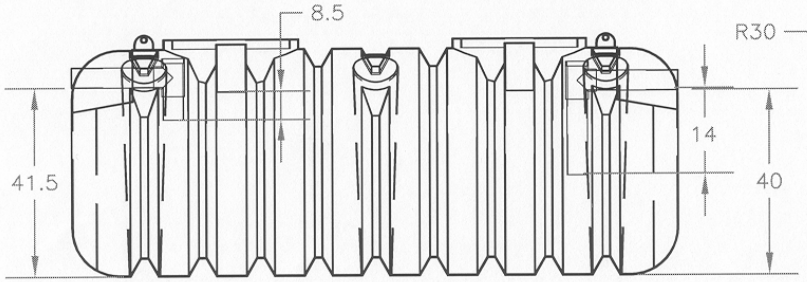

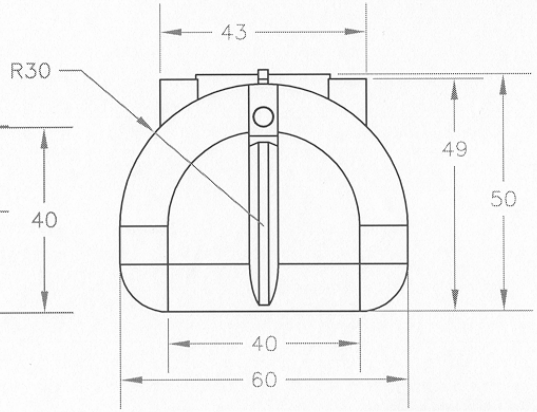

NORWESCO
ST. BONIFACIUS, MN

1050 GALLON SEPTIC TANK–SINGLE COMP.

JTP 03APR07	SIZE B	FSCM NO.	DWG NO.	REV
	SCALE 1/24		SHEET	

REVISIONS				
ZONE	REV	DESCRIPTION	DATE	APPROVED

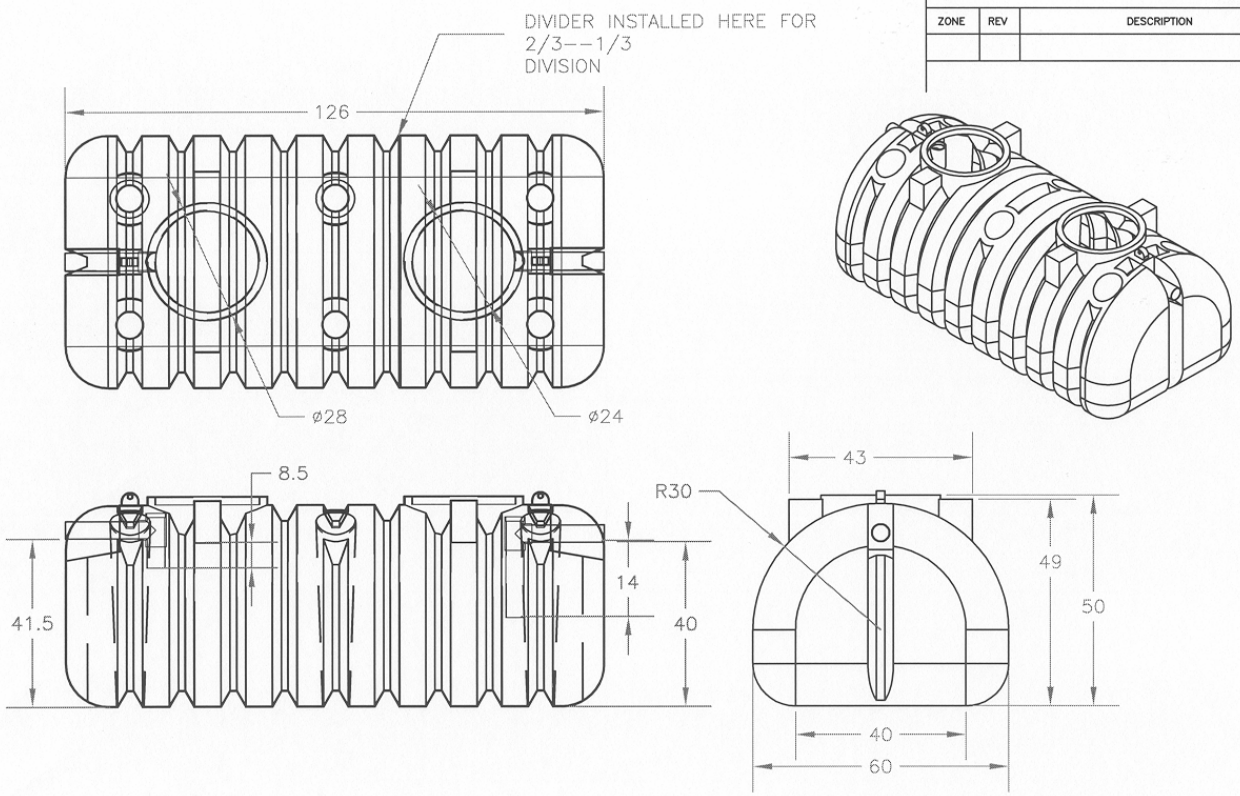

NORWESCO
ST. BONIFACIUS, MN

1050 GALLON SEPTIC
TANK-DUAL COMP.

JTP 03APR07	SIZE B	FSCM NO.	DWG NO.	REV
	SCALE 1/24		SHEET	

REVISIONS				
ZONE	REV	DESCRIPTION	DATE	APPROVED

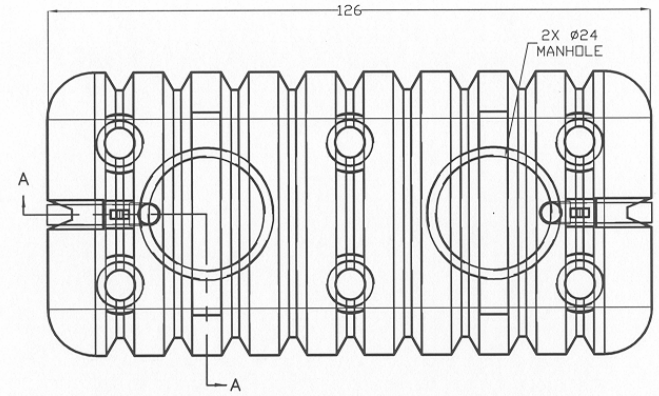

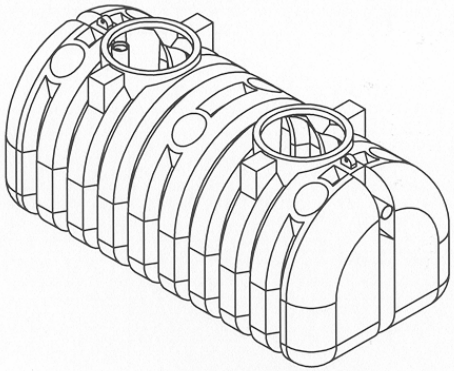

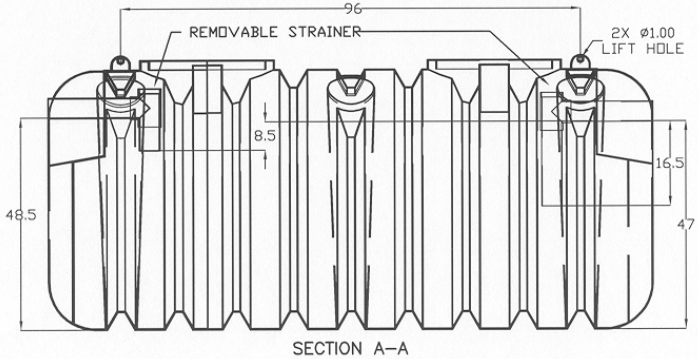

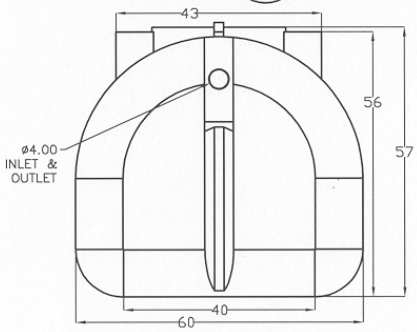

NORWESCO
ST. BONIFACIUS, MN

1250 GALLON SEPTIC TANK--SINGLE COMP

JTP 03APR07	SIZE B	FSCM NO.	DWG NO.	REV
	SCALE 1/12		SHEET	

REVISIONS				
ZONE	REV	DESCRIPTION	DATE	APPROVED

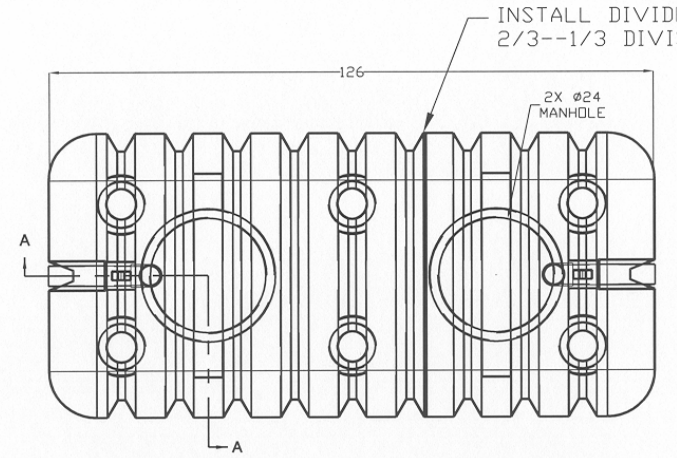

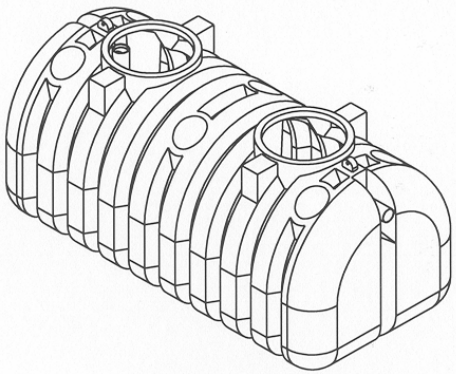

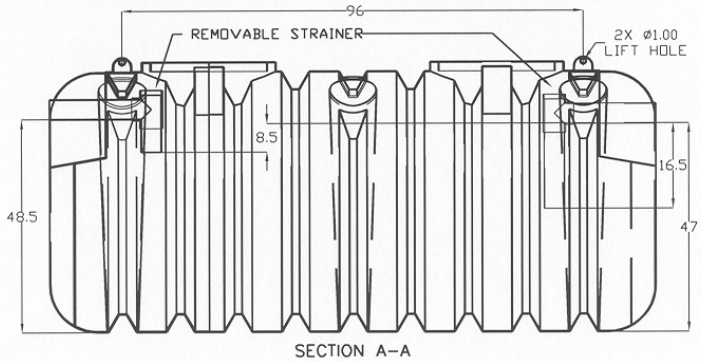

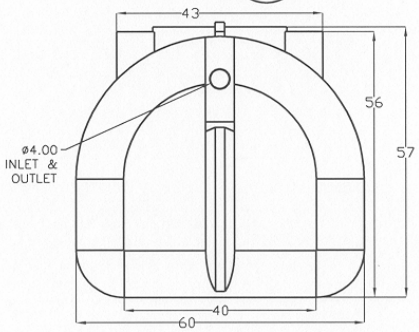

NORWESCO
ST. BONIFACIUS, MN

1250 GALLON SEPTIC TANK--DUAL COMP

JTP 03APR07	SIZE B	FSCM NO.	DWG NO.	REV
	SCALE 1/12		SHEET	

REVISIONS				
ZONE	REV	DESCRIPTION	DATE	APPROVED

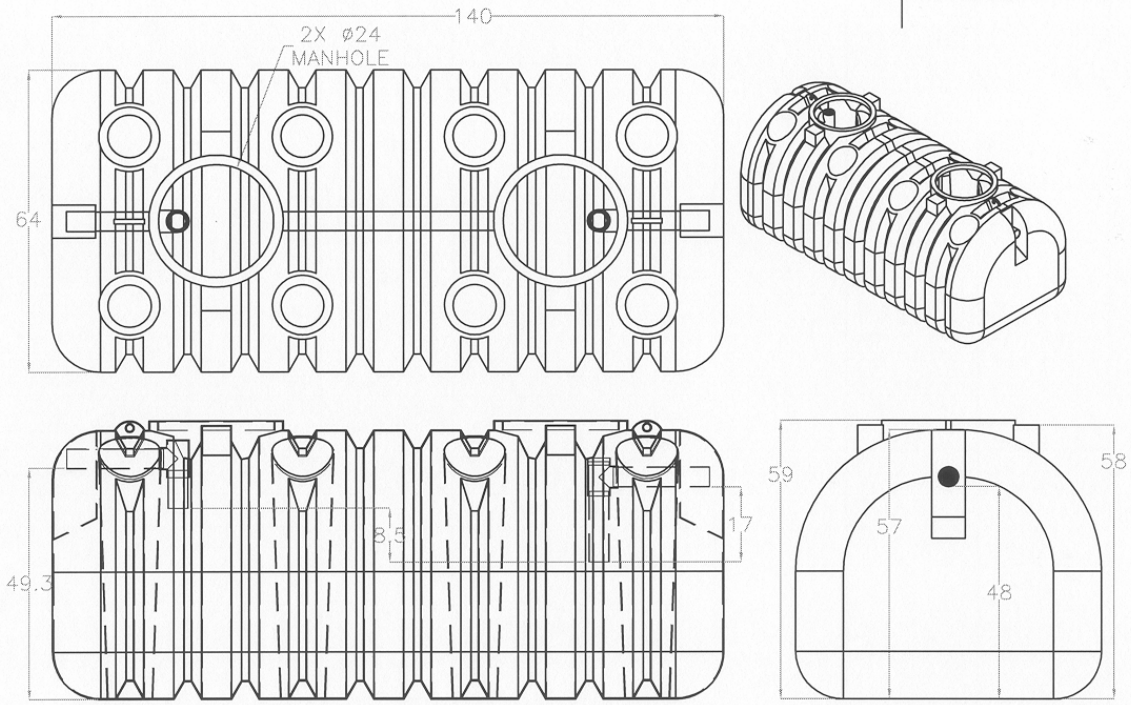

NORWESCO
ST. BONIFACIUS, MN

1500 GALLON SEPTIC TANK--SINGLE COMP.

JTP 03APR07	SIZE B	FSCM NO.	DWG NO.	REV
	SCALE 1/24		SHEET	

REVISIONS				
ZONE	REV	DESCRIPTION	DATE	APPROVED

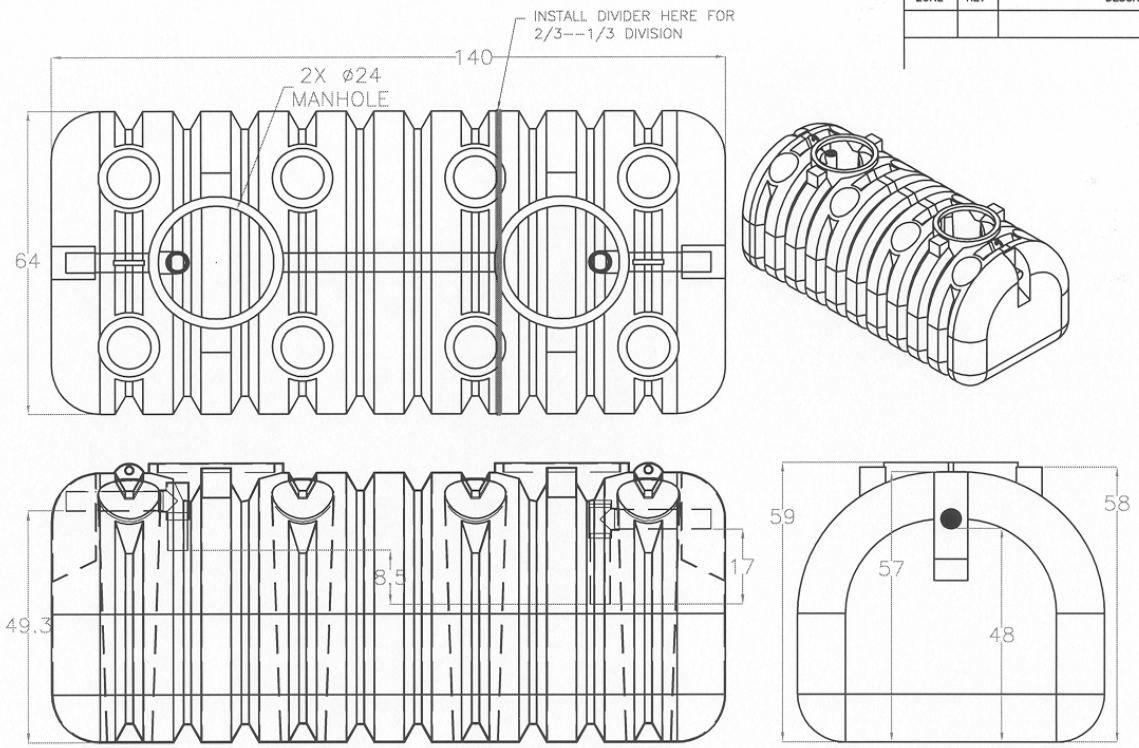

NORWESCO
ST. BONIFACIUS, MN

1500 GALLON SEPTIC TANK--DUAL COMP.

JTP 03APR07	SIZE B	FSCM NO.	DWG NO.	REV
	SCALE 1/24		SHEET	