# Prinsco Pro4™ Chambers

## Gravity Trench Installation Instructions

## Virginia

onsite chambers by PRINSCO WATER MANAGEMENT SOLUTIONS

Prinsco.com

800.992.1725

March 2022

# Pro4™ Gravity Trench Installation Instructions - Virginia

## Overview

Prinsco Pro4 Chambers are a highly efficient, gravelless drainfield solution for residential and commercial septic systems. They were specifically designed for professional contractors who are looking for cost efficiency, delivery convenience, ease of installation, and application flexibility while maximizing drainfield infiltration area.

Pro4 chambers are designed to exceed the requirements of the International Association of Plumbing and Mechanical Officials (IAPMO) standards. The Pro4's unique, asymmetrical arches provide maximum structural performance to meet the demands of today's drainfield installations. Their interlocking coupler allows for 10˚ of joint articulation in either direction for contoured trench or bed applications.

## Chamber Specifications

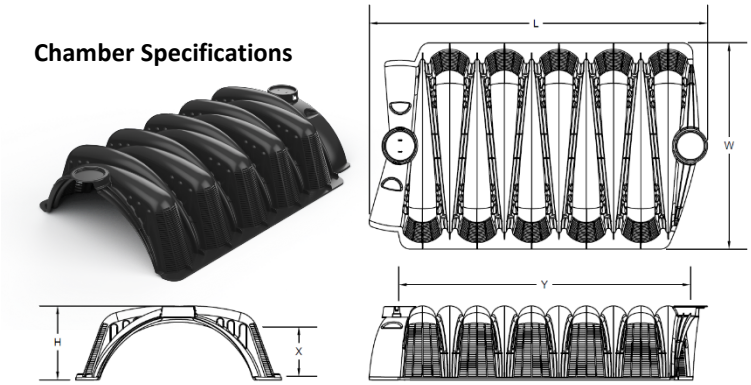


| Pro4 Chamber Specifications | |
|---|---|
| Chamber | Pro4 36 |
| Dimensions (L x W x H) | 56" x 34" x 12" |
| Effective Length (Y) | 48" |
| Chamber Storage | 51 gal |
| Sidewall Height (X) | 8.5" |
| Open Bottom Area | 9.8 ft² |
| Weight | 14.5 lbs |

## End Cap Specifications

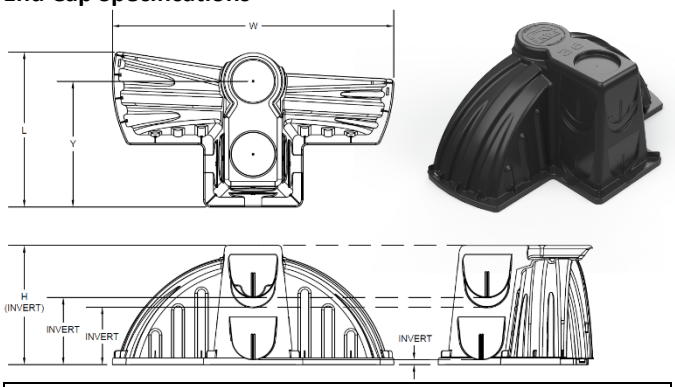


| Pro4 End Cap Specifications | |
|---|---|
| End Cap | Pro4 36 |
| Dimensions (L x W x H) | 16" x 29" x 12" |
| Effective Length (Y) | 13" |
| Invert Elevations | 0.5", 6", 7", 12" |
| End Cap Storage | 7 gal |
| Weight | 2.6 lbs |

## Gravity Trench Installation

Before you begin the installation, read these instructions and any documents referenced in it. Pro4 chambers may only be installed per State and/or local regulations and, like all drainfields, must have prior site and soil conditions approved. Contact your local health department if the chamber installation requirements need clarification.

**Required materials and tools:**

- Pro4 Chambers and End Caps
- PVC pipe and couplings
- Excavating equipment
- Leveling equipment
- Shovel and rake
- Measuring device
- Cordless drill, drill-bits, and hole-saw

## Site Preparation

*Do not install the system when there are wet soil conditions. Install erosion control prior to installation if necessary to protect the site.*

**Step 1**: Establish the location of the system components, including trenches and mark out accordingly. Set the elevations for the system components and chamber system according to plan and per state and local codes. Refer to the Vehicle Loading section for specified cover requirements. Follow minimum trench spacing per state and local codes.

**Step 2**: Trench widths should be per the following trench width chart.

*For jurisdictions requiring sloped trenches, measure and verify necessary trench bottom slope.*

| Minimum Trench Width Requirements | |
|---|---|
| Pro4 36 | 36" |
| | |
| | |

**Step 3**: Clear any debris within the trench and hand rake the trench bottom. If any bottom or sidewall smearing has occurred, scarify those surfaces.

**Step 4**: Perform a final elevation check on each trench and system components before installing chambers.

## Preparing the Pro4 End Caps

*Use the appropriate Pro4 End Cap Model per Pro4 Chamber Size, see End Cap Specifications.*

**Step 1**: Drill an opening in the end cap with a hole saw where the inlet pipe will be inserted. Select the drill point based upon the invert elevation and hole size. Pro4 End Caps can accommodate up to 4" Schedule 40 and SDR-35 pipe.

**Pro4 End Cap Inlet Drill Locations**

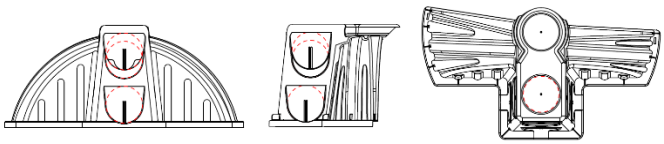

**Step 2**: Install the splash guard by removing the guard from the end cap and inserting the risers of the guard into the channels underneath the end cap footer.

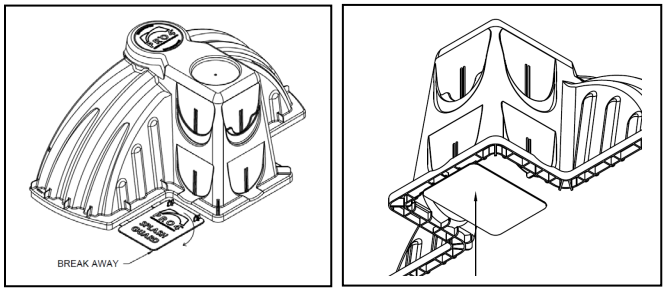


**Installing the System / Chamber Assembly**

**Step 1**: Check the elevation of the invert and make sure it is aligned with the header pipe.

**Step 2**: Position the first chamber within the start of the trench. The end of the chamber market **INLET** begins the row and should be facing the header pipe, the arrow should be pointing toward the end of the lateral.

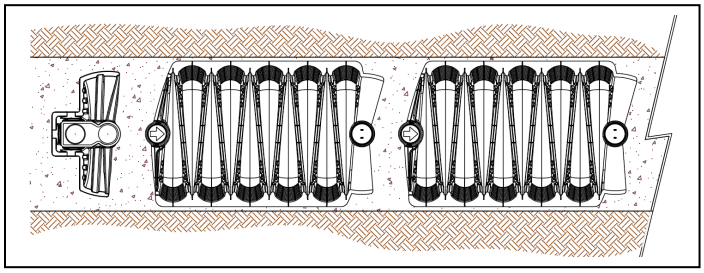

**Step 3**: Place the prepared end cap over the chamber and make sure it is aligned with the header pipe. The end cap will snap into place with locking tabs when pressed down on the chamber.

**Inlet Options**

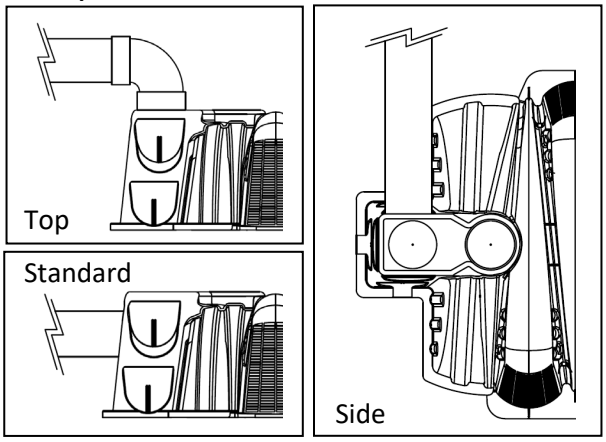


**Step 4**: Insert the inlet pipe into the prepared end cap opening. The pipe should be inserted at least 2”.

**Step 5**: With another chamber, place the coupler end marked **INLET** over the previously placed chamber. The chamber-to-chamber coupler has a positive locking feature designed to the keep the chambers secure during backfill.

**Step 6**: For installation following contours, rotate the chambers to align with the trench contour. Pro4 chambers joints can rotate a maximum of 10˚ in both directions.

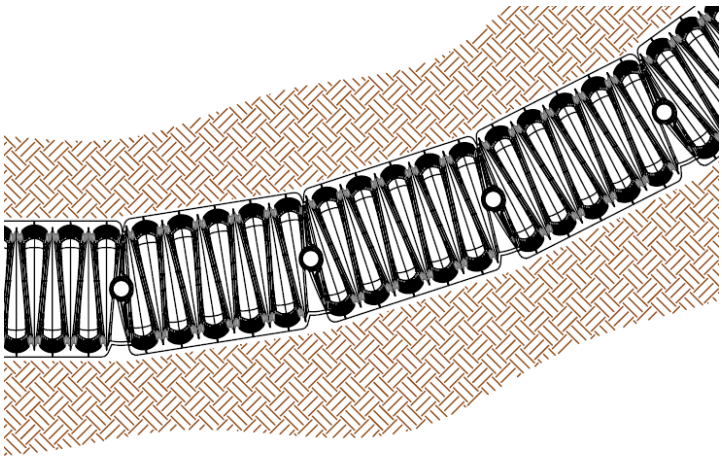

**Step 7**: Continue installing the chambers until the lateral is complete.

**Step 8**: Install an end cap on the last chamber in the trench.

**Step 9**: Once all the chambers and end caps are installed in the trench lateral, begin backfilling with soil around the sides of the chamber and around the end caps by hand. Fill soil just above the top of the sidewall louvers. Remove any large rocks that meet the sidewalls.

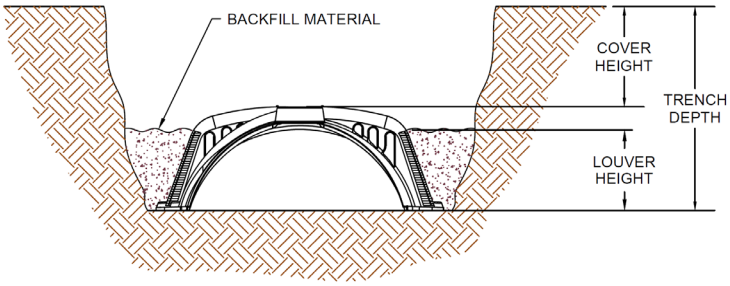


**Step 10**: Compact this soil by walking along the sides of each chamber.

***Note:*** *Walking in the soil is an important step that will keep the chambers from shifting during final backfill and provide the necessary support when covering the system.*

**Step 11**: Follow this process for each trench.

**Installing the Optional Inspection Port**
*Pro4 Chambers are designed to accommodate an optional inspection port at the beginning and end of trench laterals and mid-line at 4-foot intervals.*

**Step 1**: On the marked area on the chamber or end cap, use a hole saw to drill for the inspection port pipe. The top cut-out sections can accommodate up to 4" Schedule 40 pipe.

**Step 2**: Insert the section of pipe into the cutout port based on the desired method:

*Method A: Pipe extends down a few inches, supported by a pipe coupler.*
*Method B: Pipe rests on the lip of the chamber.*
*Method C: Pipe extends down to trench bottom with multiple holes at various elevation.*

*Method A* *Method B* *Method C*

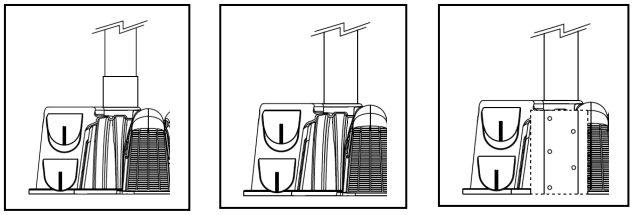

**Step 3**: Secure the pipe using a screw through the coupler/end cap ring.

**Step 4**: Fasten either a threaded clean out cap or non-threaded cap to the end of the inspection pipe at the specified length to allow access after covering the system. Vent pipes can be installed at inspection port locations.

**Covering the Pro4 Chamber System**
*State and local codes require that chamber systems be inspected and approved prior to backfilling by a health official or other official with jurisdiction.*

**Step 1**: Begin by backfilling the trenches with soil using a track-hoe or back-hoe. Remove any large rocks from the soil before backfilling.

***Note**: A minimum 6" of cover is required for non-traffic application. A minimum of 12" of compacted cover is required before a vehicle can drive over the chamber system. Refer to Vehicle Loading for requirements. Pro4 chamber trench applications allow for a maximum of 8' of cover.*

**Step 2**: It is recommended to allow for soil settling by adding 3-4 additional inches of soil cover. This additional soil will also help protect against potential erosion.

**Step 3**: To prevent further erosion, cover the system with seed or sod.

**Step 4**: For new construction, it is recommended to mark the area around the system to prevent construction vehicles from unknowingly driving over the system.

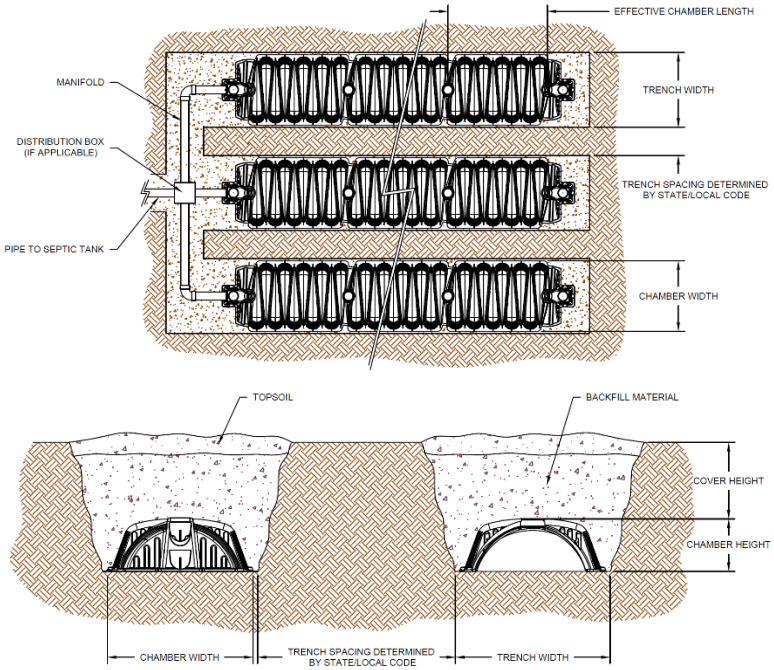


**Vehicle Loading**
When operating a vehicle near a chamber drain field system, avoid driving directly over the top of the chamber. Pro4 Chambers require a minimum of 12" of compacted cover over the top of chambers to support AASHTO H-10 loading. This loading is equivalent to 16,000 lbs. axle weight. For shallow cover applications installed with 6" of compacted backfill, chambers can support tracked vehicles that are less than 10,000 lbs. gross vehicle weight. When backfilling and driving over a chamber system, do not travel parallel over the length of the chamber rows, but rather perpendicular. Additional soil compaction may occur if heavy equipment is operated over a system. Do not drive over the system when backfilling with sand.

Chambers are to be used only in non-traffic areas.

For bed and pressure dosing applications see: *Pro4 Bed Installation Instructions* & *Pro4 Pressure Distribution Installation Instructions*.

*Prinsco's Pro4 Limited Warranty* is available at www.Prinsco.com or call (320) 222-6800.

For questions and technical support: Please contact Prinsco Technical Services at (320) 222-6800 or visit us at www.Prinsco.com.

# Prinsco Pro4™ Chambers

## Bed Installation Instructions

## Virginia

onsite chambers by PRINSCO WATER MANAGEMENT SOLUTIONS

Prinsco.com

800.992.1725

March 2022

# Pro4™ Bed Installation Instructions - Virginia

## Overview

Prinsco Pro4 Chambers are a highly efficient, gravelless drainfield solution for residential and commercial septic systems. They were specifically designed for professional contractors who are looking for cost efficiency, delivery convenience, ease of installation, and application flexibility while maximizing drainfield infiltration area.

Pro4 chambers are designed to exceed the requirements of the International Association of Plumbing and Mechanical Officials (IAPMO) standards. The Pro4's unique, asymmetrical arches provide maximum structural performance to meet the demands of today's drainfield installations. Their interlocking coupler allows for 10˚ of joint articulation in either direction for contoured trench or bed applications.

## Chamber Specifications

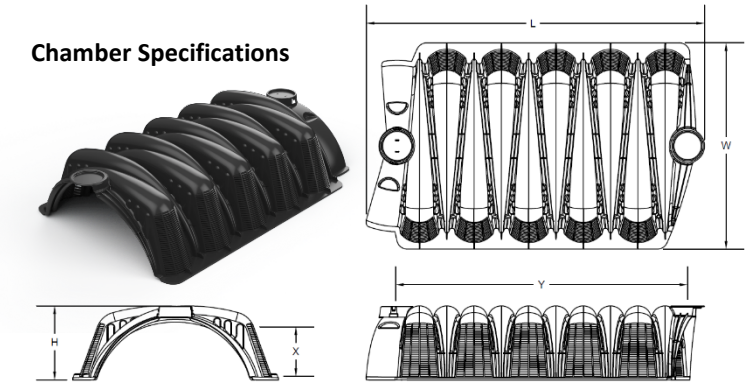


| Pro4 Chamber Specifications | |
|---|---|
| Chamber | Pro4 36 |
| Dimensions (L x W x H) | 56" x 34" x 12" |
| Effective Length (Y) | 48" |
| Chamber Storage | 51 gal |
| Sidewall Height (X) | 8.5" |
| Open Bottom Area | 9.8 ft² |
| Weight | 14.5 lbs |

## End Cap Specifications

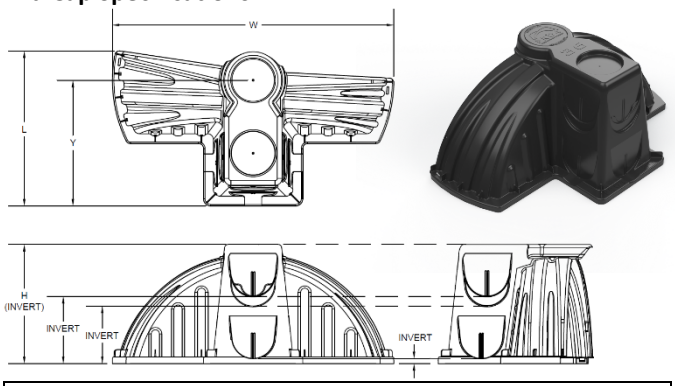


| Pro4 End Cap Specifications | |
|---|---|
| End Cap | Pro4 36 |
| Dimensions (L x W x H) | 16" x 29" x 12" |
| Effective Length (Y) | 13" |
| Invert Elevations | 0.5", 6", 7", 12" |
| End Cap Storage | 7 gal |
| Weight | 2.6 lbs |

## Bed Installation

Before you begin the installation, read these instructions and any documents referenced in it. Pro4 chambers may only be installed per State and/or local regulations and, like all drainfields, must have prior site and soil conditions approved. Contact your local health department if the chamber installation requirements need clarification.

**Required materials and tools:**

- Pro4 Chambers and End Caps
- PVC pipe and couplings
- Excavating equipment
- Leveling equipment
- Shovel and rake
- Measuring device
- Cordless drill, drill-bits, and hole-saw

## Site Preparation

*Do not install the system when there are wet soil conditions. Install erosion control prior to installation if necessary to protect the site.*

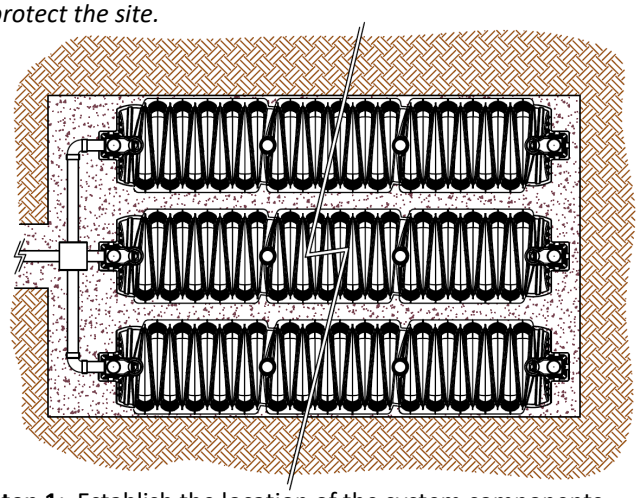

**Step 1**: Establish the location of the system components, including the bed and mark out accordingly. Set the elevations for the system components and chamber system according to plan and per state and local codes. Refer to the Vehicle Loading section for specified cover requirements.

**Step 2**: Beds shall be level. Confirm by measuring.

**Step 3**: Clear any debris within the installation area and hand rake the bed's base. If any base or sidewall smearing has occurred, scarify those surfaces.

**Step 4**: Perform a final elevation check on the bed and system components before installing chambers.

## Preparing the Pro4 End Caps

*Use the appropriate Pro4 End Cap model per Pro4 Chamber size, see Pro4 End Cap Specifications for sizes.*

**Step 1**: Drill an opening in the end cap with a hole saw where the inlet pipe will be inserted. Select the drill point based upon the invert elevation and hole size. Pro4 End Caps can accommodate up to 4” Schedule 40 and SDR-35 pipe.

**Pro4 End Cap Inlet Drill Locations**

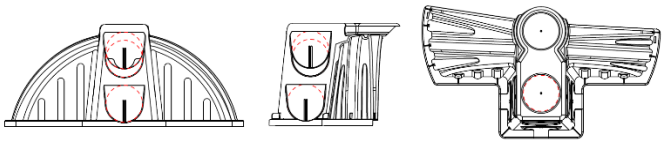

**Step 2**: Install the splash plate by removing the guard from the end cap and inserting the risers of the guard into the channels underneath the end cap footer.

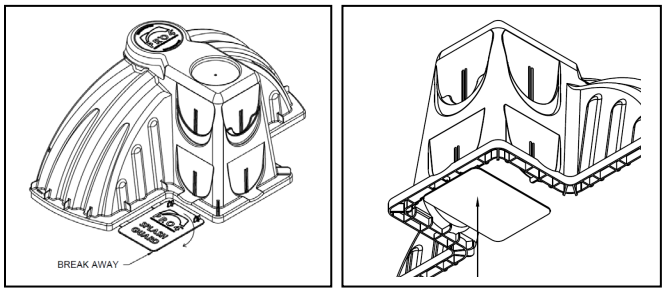


***Note***: *For pressure mound systems, also refer to Pro4 Pressure Distribution Installation Instructions.*

**Installing the System / Chamber Assembly**

**Step 1**: Check the elevation of the invert and make sure it is aligned with the header pipe.

**Step 2**: Position the first chamber within the start of the bed. The end of the chamber marked **INLET** begins the row and should be facing the header pipe, the arrow should be pointing toward the end of the lateral.

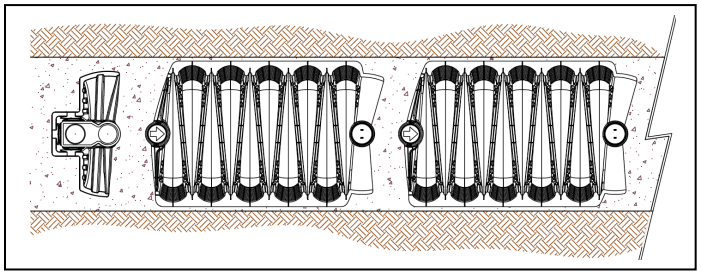

**Step 3**: Place the prepared end cap over the chamber and make sure it is aligned with the header pipe. The end cap will snap into place with locking tabs when pressed down on the chamber.

**Inlet Options**

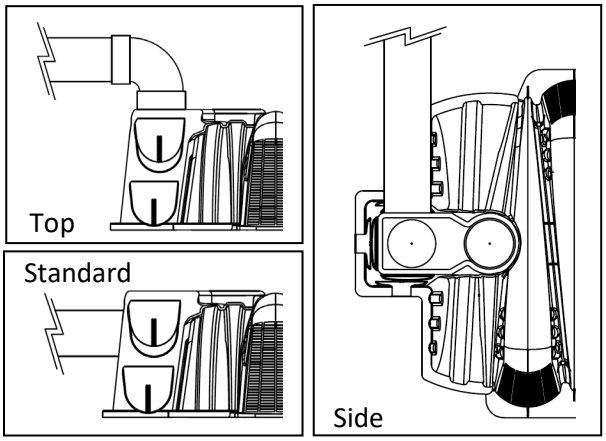


**Step 4**: Insert the inlet pipe into the prepared end cap opening. The pipe should be inserted at least 2”.

**Step 5**: With another chamber, place the coupler end marked **INLET** over the previously placed chamber. The chamber-to-chamber coupler has a positive locking feature designed to the keep the chambers secure during backfill.

**Step 6**: For installations following contours, rotate the chambers to align with the bed contour. Pro4 chambers joints can rotate a maximum of 10˚ in both directions.

**Step 7**: Continue installing the chambers until the lateral is complete.

**Step 8**: Install an end cap on the last chamber in the lateral.

**Step 9:** Follow this process for each lateral in the bed.

***Note***: *It is recommended that chambers in bed systems have 4”-6” spacing between rows. Follow local and state codes regarding chamber spacing.*

**Step 10**: Once all the chambers and end caps are installed in the bed, begin carefully backfilling with soil around the sides of the chamber and around the end caps by hand. Fill soil just above the top of the sidewall louvers. Remove any large rocks that meet the sidewalls.

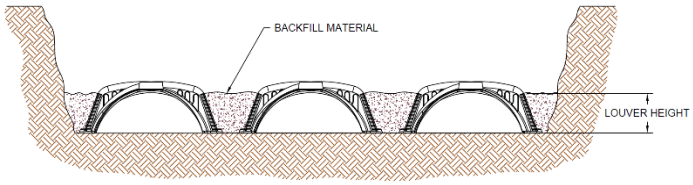


**Step 11**: Compact this soil by walking along the sides of each chamber.

***Note:*** *Walking in the soil is an important step that will keep the chambers from shifting during final backfill and provide the necessary support when covering the system.*

**Installing the Optional Inspection Port**
*Pro4 Chambers are designed to accommodate an optional inspection port at the beginning and end of trench laterals and mid-line at 4-foot intervals.*

**Step 1**: On the marked area on the chamber or end cap, use a hole saw to drill for the inspection port pipe. The top cut-out sections can accommodate up to 4" Schedule 40 pipe.

**Step 2**: Insert the section of pipe into the cutout port based on the desired method:
*Method A: Pipe extends down a few inches, supported by a pipe coupler.*
*Method B: Pipe rests on the lip of the chamber.*
*Method C: Pipe extends down to trench bottom with multiple holes at various elevation.*

*Method A* *Method B* *Method C*

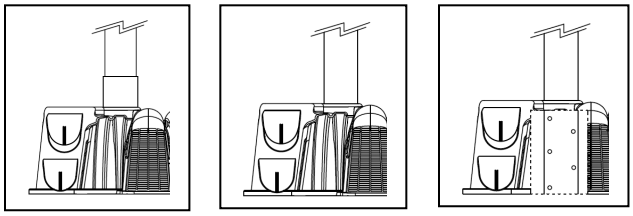

**Step 3**: Secure the pipe using a screw thru the coupler ring.

**Step 4**: Fasten either a threaded clean out cap or non-threaded cap to the end of the inspection pipe at the specified length to allow access after covering the system. Vent pipes can be installed at inspection port locations.

**Covering the Pro4 Bed Chamber System**
*State and local codes require that chamber systems be inspected and approved prior to backfilling by a health official or other official with jurisdiction.*

**Step 1**: Begin by backfilling the bed with soil using a track-hoe or back-hoe. Remove any large rocks from the soil before backfilling.

***Note**: Do not drive wheeled vehicles over the bed system when applying backfill.*

***Note**: A minimum 6" of cover is required for non-traffic application. A minimum of 12" of compacted cover is required before a vehicle can drive over the chamber system. Refer to Vehicle Loading for requirements found below in this document. Pro4 chamber bed applications allow for a maximum of 4' of cover.*

**Step 2**: It is recommended to allow for soil settling by adding 3-4 additional inches soil the system. This additional soil will also help protect against potential erosion.

**Step 3**: To prevent further erosion, cover the system with seed or sod.

**Step 4**: For new construction, it is recommended to mark the area around the system to prevent construction vehicles from unknowingly driving over the system.

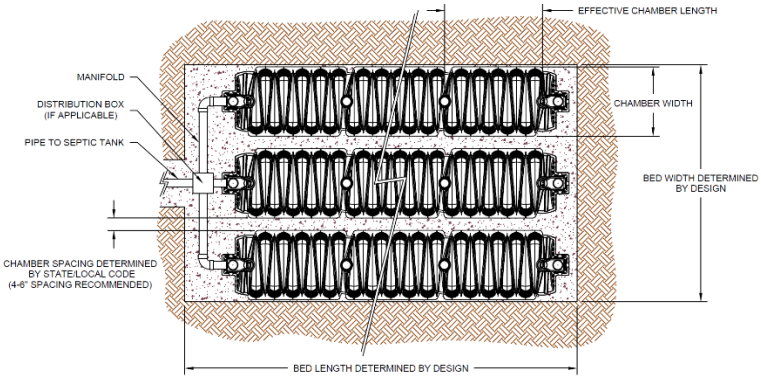


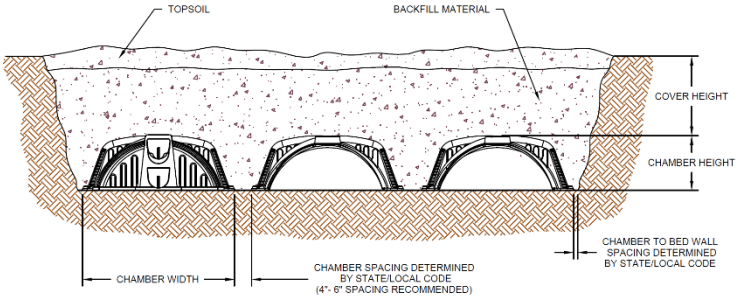


**Vehicle Loading**
When operating a vehicle near a chamber drain field, avoid driving directly over the top of the chamber. Pro4 Chambers require a minimum of 12" of compacted cover over the top of chambers to support AASHTO H-10 loading. This loading is equivalent to 16,000 lbs. axle weight. For shallow cover applications installed with 6" of compacted backfill, chambers can support tracked vehicles that are less than 10,000 lbs. gross vehicle weight. It is recommended to mound 12" of soil over the bed system before driving over it and grade the cover to 6" upon completion. When backfilling and driving over a chamber system, do not travel parallel over the length of chamber rows, but rather perpendicular. Additional soil compaction may occur if heavy equipment is operated over a system. Do not drive over the system when backfilling with sand.

Chambers are to be used only in non-traffic areas.

For gravity trench and pressure dosing applications see: *Pro4 Gravity Trench Installation Instructions* & *Pro4 Pressure Distribution Installation Instructions*.

*Prinsco's Pro4 Limited Warranty* is available at www.Prinsco.com or call (320) 222-6800.

For questions and technical support: Please contact Prinsco Technical Services at (320) 222-6800 or visit us at www.Prinsco.com.

# Prinsco Pro4™ Chambers

## Pressure Distribution Installation Instructions

## Virginia

onsite chambers by PRINSCO WATER MANAGEMENT SOLUTIONS

Prinsco.com

800.992.1725

March 2022

## Overview

Prinsco Pro4 Chambers are a highly efficient, gravelless drainfield solution for residential and commercial septic systems. They were specifically designed for professional contractors who are looking for cost efficiency, delivery convenience, ease of installation, and application flexibility while maximizing drainfield infiltration area.

Pro4 chambers are designed to exceed the requirements of the International Association of Plumbing and Mechanical Officials (IAPMO) standards. The Pro4's unique, asymmetrical arches provide maximum structural performance to meet the demands of today's drainfield installations. Their interlocking coupler allows for 10˚ of joint articulation in either direction for contoured trench or bed applications.

## Chamber Specifications

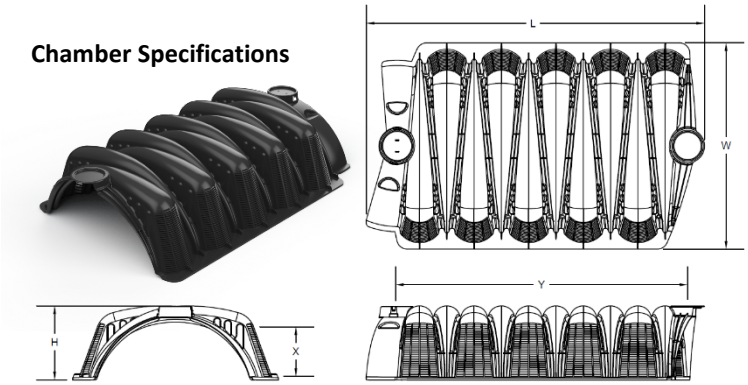


| Pro4 Chamber Specifications | |
|---|---|
| Chamber | Pro4 36 |
| Dimensions (L x W x H) | 56" x 34" x 12" |
| Effective Length (Y) | 48" |
| Chamber Storage | 51 gal |
| Sidewall Height (X) | 8.5" |
| Open Bottom Area | 9.8 ft² |
| Weight | 14.5 lbs |

## End Cap Specifications

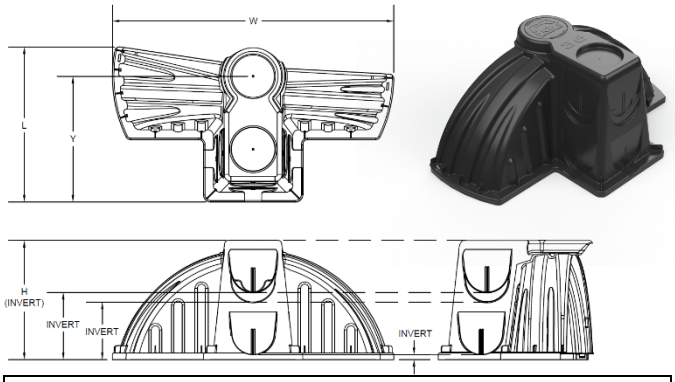


| Pro4 End Cap Specifications | |
|---|---|
| End Cap | Pro4 36 |
| Dimensions (L x W x H) | 16" x 29" x 12" |
| Effective Length (Y) | 13" |
| Invert Elevations | 0.5", 6", 7", 12" |
| End Cap Storage | 7 gal |
| Weight | 2.6 lbs |

## Pressure Distribution Installation

Before you begin the installation, read these instructions and any documents referenced in it. Pro4 chambers may only be installed per State and/or local regulations and, like all drainfields, must have prior site and soil conditions approved. Contact your local health department if the chamber installation requirements need clarification.

**Required materials and tools:**

- Pro4 Chambers and End Caps
- PVC pipe and couplings
- Excavating equipment
- Leveling equipment
- Shovel and rake
- Measuring device
- Cordless drill, drill-bits, and hole-saw

## Site Preparation

*Do not install the system when there are wet soil conditions. Install erosion control prior to installation if necessary to protect the site.*

**Step 1**: Establish the location of the system components, including trenches and mark out accordingly. Set the elevations for the system components and chamber system according to plan and per state and local codes. Refer to the Vehicle Loading section for specified cover requirements. Follow minimum trench spacing per state and local codes.

**Step 2**: Pressure trenches shall be level. Trench widths should be per the following trench width chart.

| Minimum Trench Width Requirements | |
|---|---|
| Pro4 36 | 36" |
| | |
| | |

**Step 3**: Clear any debris within the trench and hand rake the trench bottom. If any bottom or sidewall smearing has occurred, scarify those surfaces.

**Step 4**: Place pressure lateral pipe on the ground for each chamber row.

***Note***: *Follow local and state pressure distribution regulations when preparing the pipe.*

**Step 5**: Drill pressure pipe orifices per plan (diameter and spacing). Orifices should be located at the top of the pipe.

**Step 6**: Drill a drain hole at the end of the pressure lateral on the bottom to allow for pipe drainage after each dose. Drain holes should be above the splash plate to prevent erosion.

***Note***: *A pressure test (squirt test) may be required by the local health department prior to chamber installation.*

**Preparing the Pro4 End Caps**

*Use the appropriate Pro4 End Cap Model per Pro4 Chamber Size, see End Cap Specifications.*

**Step 1**: Drill an opening in the end cap at the elevation where the pressure pipe will run. The end cap can accommodate up to 2" Schedule 40 pipe.

***Note****: The pressure pipe lateral can be installed using pipe hanging ties near the ceiling of chamber or installed with the pipe lateral resting on the trench or bed surface.*

**Pro4 End Cap Pressure Pipe Drill Location**

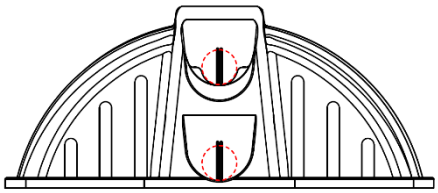

**Step 2**: Install the splash guard by removing the guard from the end cap and inserting the risers of the guard into the channels underneath the end cap footer.

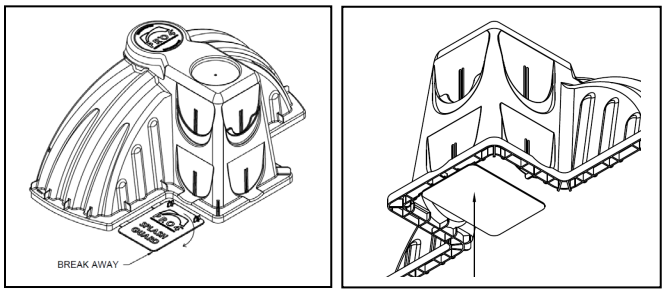


**Step 3**: Insert the pressure lateral pipe through the drilled end cap hole, connect the lateral pipe to the manifold pipe.

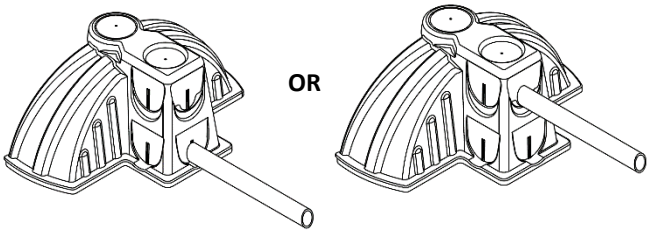


**Installing the System / Chamber Assembly**

**Step 1**: Position the first chamber within the start of the trench. The end of the chamber marked **INLET** begins the row and should be facing the header pipe, the arrow should be pointing toward the end of the lateral.

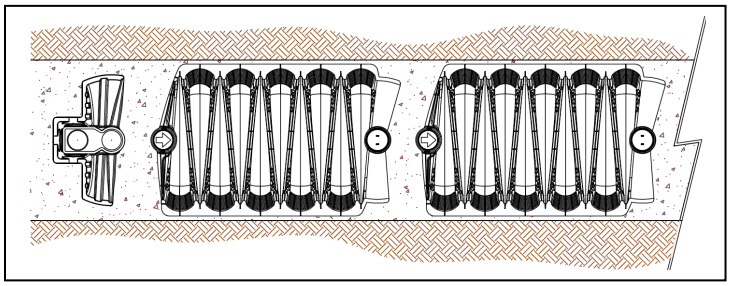

**Step 2**: Move the prepared end cap along the pressure lateral pipe and over the chamber coupler. The end cap will snap into place with locking tabs when pressed down on the chamber.

**Pressure Pipe Inlet Options**

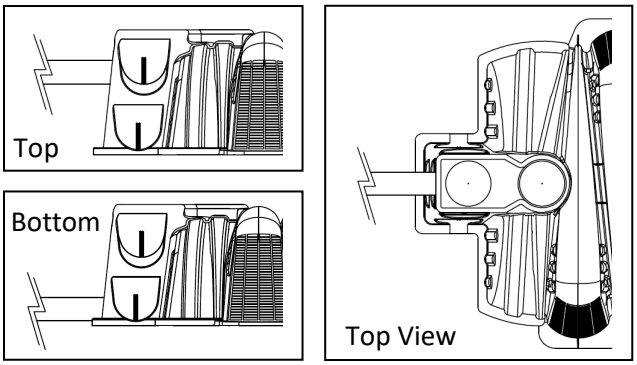


**Step 3A (Hanging the pressure pipe)**: Using plastic pipe hanging ties, fasten the pressure pipe to the ceiling of the chamber at back end using the drain hole slots on the coupler.

**Step 3B (Pipe on trench or bed bottom)**: Stabilize the pipe with cross tees or other method to prevent movement.

**Step 4**: With another chamber, place the coupler end marked **INLET** over the previously placed chamber. If hanging the pipe, repeat **Step 3A**. If installing on trench bottom, repeat **Step 3B.** The chamber-to-chamber coupler has a positive locking feature designed to keep the chambers secure during backfill.

**Step 5**: For installation following contours, rotate the chambers to align with the trench contour. Pro4 chamber joints can rotate a maximum of 10˚ in both directions.

**Step 6**: Continue installing the chambers until the lateral is complete.

**Step 7**: Install an end cap on the last chamber in the trench. If the pressure pipe is hanging, do not use a hanging tie on the last chamber; rather let the end cap support the pipe. It is recommended to install a clean-out for drainfield maintenance and flushing at the end of each lateral as well as installing a standpipe for testing the distal head.

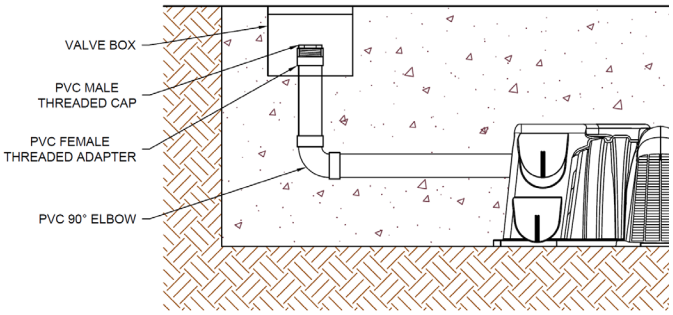


**Step 8**: Once all the chambers and end caps are installed in a trench lateral, begin backfilling with soil around the sides of the chamber and around the end caps by hand. Fill soil just above the top of the sidewall louvers. Remove any large rocks that meet the sidewalls.

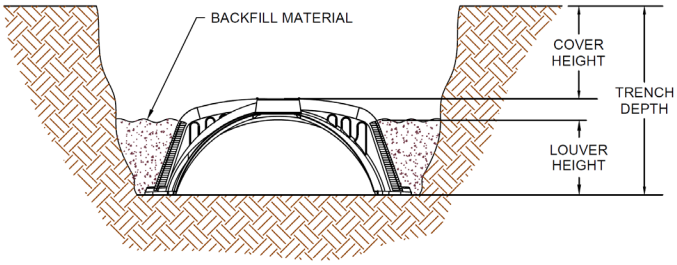


**Step 9**: Compact this soil by walking along the sides of each chamber.

***Note:*** *Walking in the soil is an important step that will keep the chambers from shifting during final backfill and provide the necessary support when covering the system.*

**Step 10**: Follow this process for each trench.

**Installing the Optional Inspection Port**

*Pro4 Chambers are designed to accommodate an optional inspection port at the beginning and end of trench laterals and mid-line at 4-foot intervals.*

**Step 1**: On the marked area on the chamber or end cap, use a hole saw to drill for inspection port pipe. The top cut-out sections can accommodate up to 4" Schedule 40 pipe.

**Step 2**: Insert the section of pipe into the cutout port based on the desired method:

*Method A: Pipe extends down only a few inches, supported by a pipe coupler.*
*Method B: Pipe rests on the lip of the chamber.*

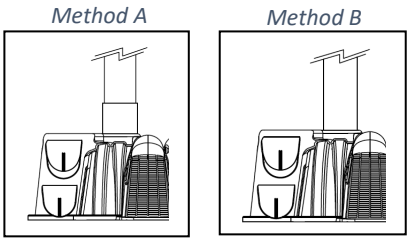


**Step 3**: Secure the pipe using a screw thru the coupler ring.

**Step 4**: Fasten either a threaded clean out cap or non-threaded cap to the of the inspection pipe at the specified length to allow access after covering the system. Vent pipes can be installed at inspection port locations.

**Covering the Pro4 Chamber System**

*State and local codes require that chamber systems be inspected and approved prior to backfilling by a health official or other official with jurisdiction.*

**Step 1**: Begin by backfilling the trenches with soil using a track-hoe or back-hoe. Remove any large rocks from the soil before backfilling.

***Note****: A minimum 6" of cover is required for non-traffic application. A minimum of 12" of compacted cover is required before a vehicle can drive over the chamber system. Refer to Vehicle Loading for requirements found below in this document. Pro4 chamber trench applications allow for a maximum of 8' of cover.*

**Step 2**: It is recommended to allow for soil settling by adding 3-4 additional inches soil the system. This additional soil will also help protect against potential erosion.

**Step 3**: To prevent further erosion, cover the system with seed or sod.

**Step 4**: For new construction, it is recommended to mark the area around the system to prevent construction vehicles from unknowingly driving over the system.

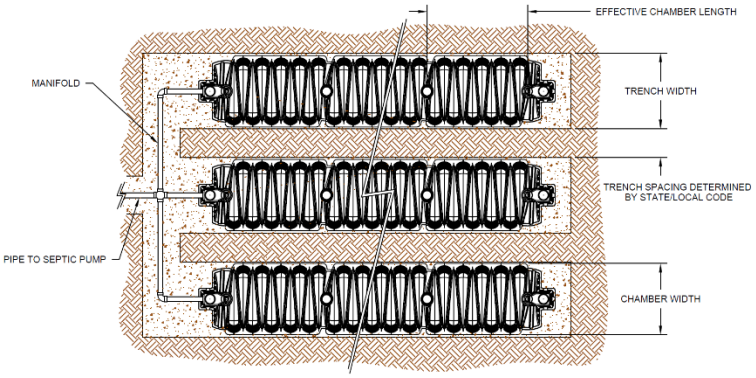


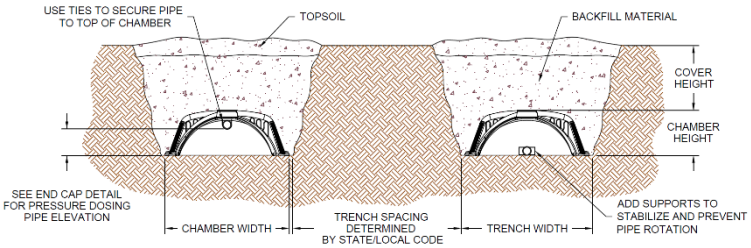

**Vehicle Loading**

When operating a vehicle near a chamber drain field system, avoid driving directly over the top of the chamber. Pro4 Chambers require a minimum of 12" of compacted cover over the top of chambers to support AASHTO H-10 loading. This loading is equivalent to 16,000 lbs. per axle. For shallow cover applications installed with 6" of compacted backfill, chambers can support tracked vehicles that are less than 10,000 lbs. gross vehicle weight. When backfilling and driving over a chamber system, do not travel parallel over the length of the chamber rows, but rather perpendicular. Additional soil compaction may occur if heavy equipment is operated over a system. Do not drive over the system when backfilling with sand.

Chambers are to be used only in non-traffic areas.

For bed and gravity trench applications see: *Pro4 Bed Installation Instructions* & *Pro4 Gravity Trench Installation Instructions*.

*Prinsco's Pro4 Limited Warranty* is available at www.Prinsco.com or call (320) 222-6800.

For questions and technical support: Please contact Prinsco Technical Services at (320) 222-6800 or visit us at www.Prinsco.com.