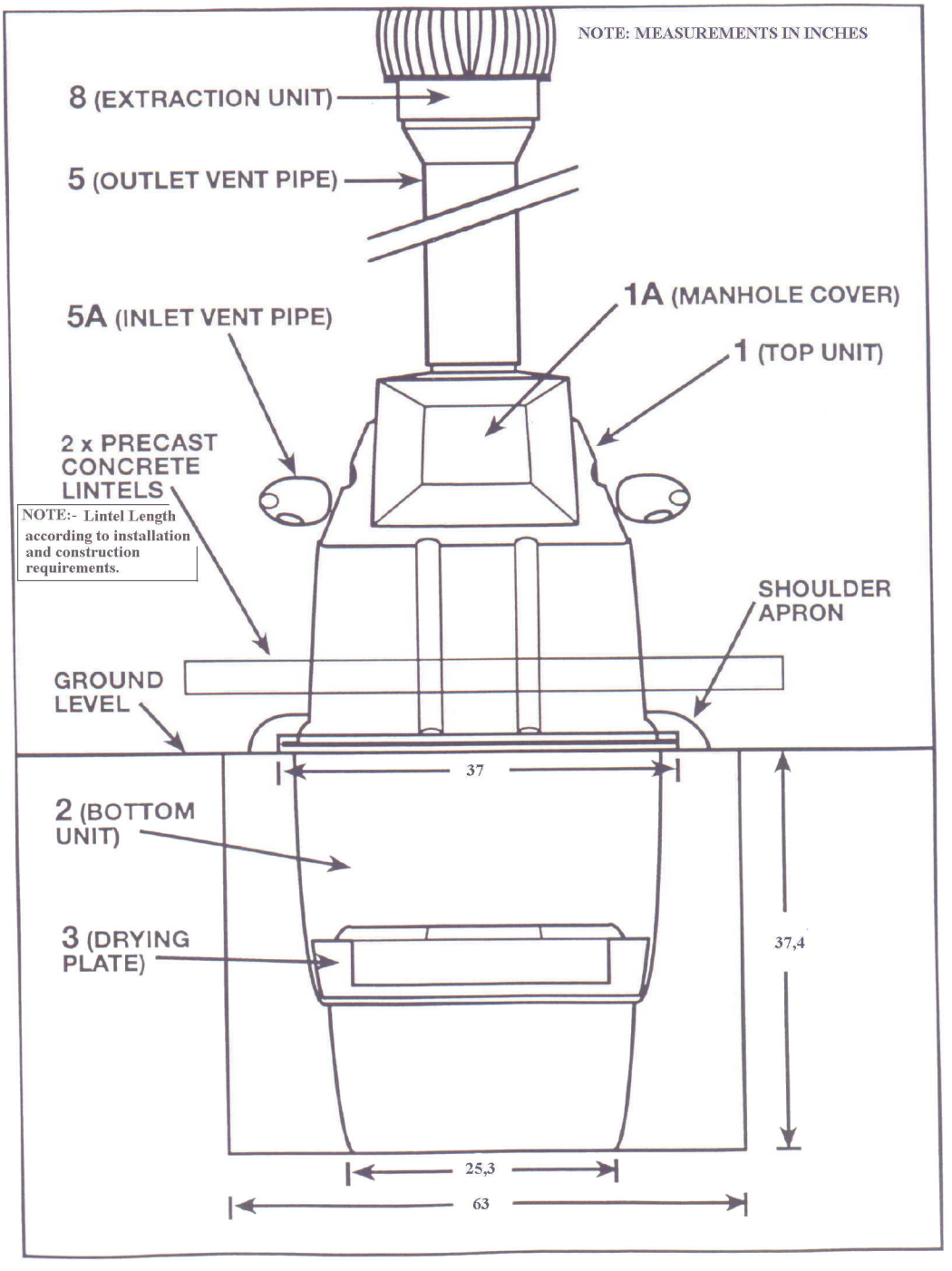2040 ENGINEERING PLANS: END VIEW