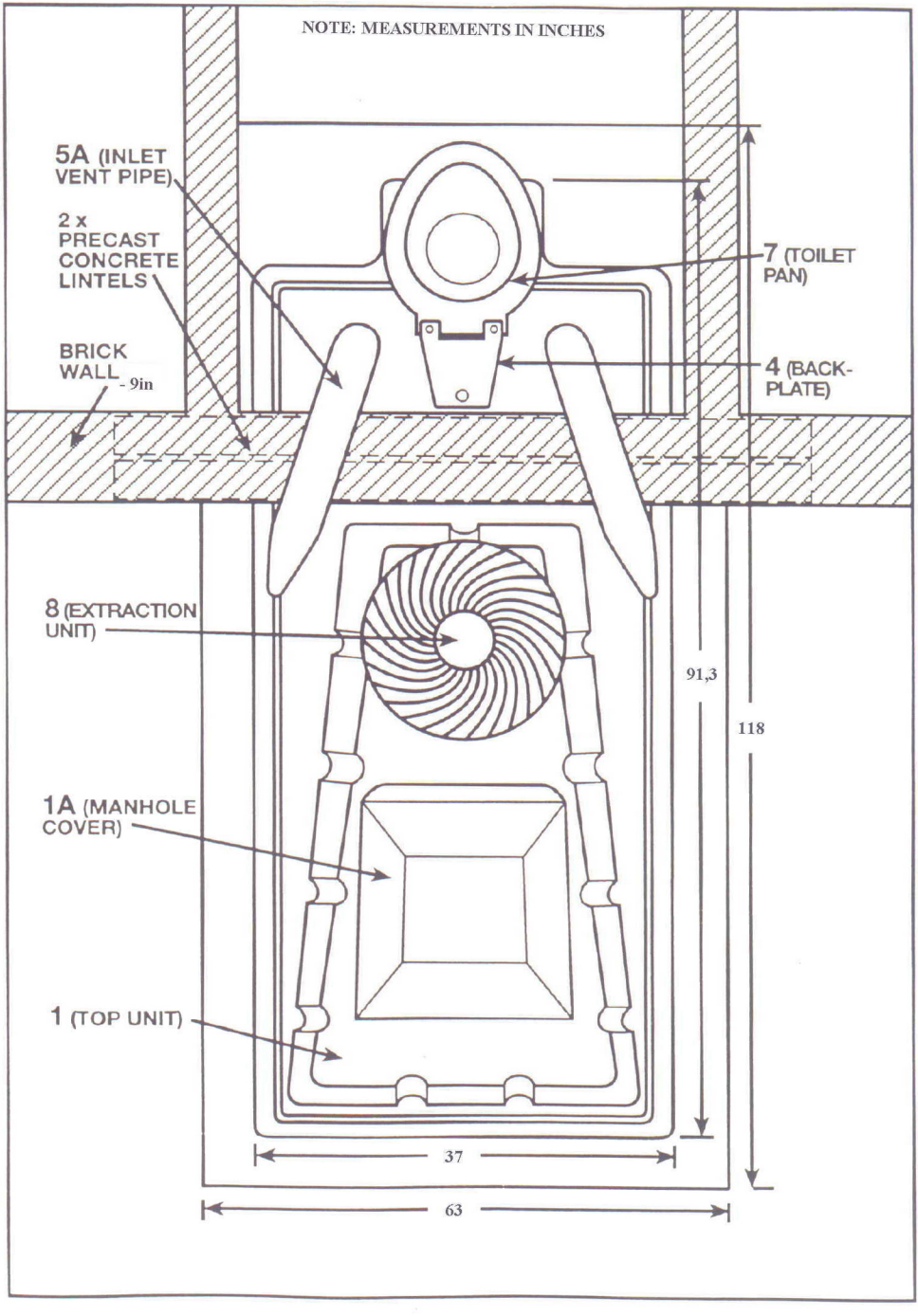2040 ENGINEERING PLANS: TOP VIEW